MT Series

Programming manual

Retain for future use

Variable speed drives
for AC motors

Software V1.2

MOTORTRONICS MT Series

Buy: www.ValinOnline.com | Phone 844-385-3099 | Email: CustomerService@valin.com

Contents

Before you begin 4
Documentation structure 5
Software enhancements 6
Steps for setting up the braking unit 8
Factory configuration 9
Application functions 10
Setup - Preliminary recommendations 14
Graphic display terminal 16
- Description of terminal 16
- Description of the graphic screen 17
- First power-up - [5. LANGUAGE] menu 20
- Subsequent power ups 21
- Programming: Example of accessing a parameter 22
- Quick navigation 23

Integrated display terminal 26
- Functions of the display and the keys 26
- Accessing menus 27
- Accessing menu parameters 28

[2. ACCESS LEVEL] (LAC-) 29
Structure of parameter tables 32
Interdependence of parameter values 33
Finding a parameter in this document 34
[1.1 SIMPLY START] (SIM-) 35
[1.2 MONITORING] (SUP-) 43
[1.3 SETTINGS] (SEt-) 52
[1.4 MOTOR CONTROL] (drC-) 66
[1.5 INPUTS / OUTPUTS CFG] (I-O-) 84
[1.6 COMMAND] (CtL-) 112
[1.7 APPLICATION FUNCT.] (FUn-) 125
[1.8 FAULT MANAGEMENT] (FLt-) 209
[1.9 COMMUNICATION] (COM-) 233
[1.10 DIAGNOSTICS] 237
[1.11 IDENTIFICATION] 239
[1.12 FACTORY SETTINGS] (FCS-) 240
[1.13 USER MENU] (USr-) 243
[1.14 PROGRAMMABLE CARD] (PLC-) 244
[3. OPEN/SAVE AS] 245
[4. PASSWORD] (COd-) 247
[6 MONITORING CONFIG.] 249
[7 DISPLAY CONFIG.] 253
[MULTIPOINT SCREEN] 258
Maintenance 259
Faults - Causes - Remedies 260
User settings tables 266
Index of functions 268
Index of parameter codes 269

Buy: www.ValinOnline.com | Phone 844-385-3099 | Email: CustomerService@valin.com

Read and understand these instructions before performing any procedure on this drive.

⚠ DANGER

HAZARDOUS VOLTAGE

- Read and understand the Installation Manual before installing or operating the MT Series drive. Installation, adjustment, repair, and maintenance must be performed by qualified personnel.
- The user is responsible for compliance with all international and national electrical standards in force concerning protective grounding of all equipment.
- Many parts of this variable speed drive, including the printed circuit boards, operate at the line voltage. DO NOT TOUCH.
  Use only electrically insulated tools.
- DO NOT touch unshielded components or terminal strip screw connections with voltage present.
- DO NOT short across terminals PA/+ and PC/- or across the DC bus capacitors.
- Install and close all the covers before applying power or starting and stopping the drive.
- Before servicing the variable speed drive
  - Disconnect all power.
  - Place a “DO NOT TURN ON” label on the variable speed drive disconnect.
  - Lock the disconnect in the open position.
- Disconnect all power including external control power that may be present before servicing the drive. WAIT 15 MINUTES to allow the DC bus capacitors to discharge. Then follow the DC bus voltage measurement procedure given in the Installation Manual to verify that the DC voltage is less than 45 V. The drive LEDs are not accurate indicators of the absence of DC bus voltage.

Electric shock will result in death or serious injury.

CAUTION

DAMAGED EQUIPMENT

Do not operate or install any drive that appears damaged.
Failure to follow this instruction can result in equipment damage.

Buy: www.ValinOnline.com | Phone 844-385-3099 | Email: CustomerService@valin.com

Documentation structure

The following MT Series technical documents are available on the CD-ROM supplied with the drive.

Installation Manual

This describes how to assemble and connect the drive.

Programming manual

This describes the functions, parameters and use of the drive keypads (integrated display keypad and graphic display keypad).
The communication functions are not described in this manual. This can be found in the Modbus (or other protocol) manual.

Communication Parameters Manual

This manual describes:

- The drive parameters with specific information for use via a bus or communication network.
- The operating modes specific to communication (state chart).
- The interaction between communication and local control.

Manual for Modbus

This manual describes the assembly, connection to the bus or network, signaling, diagnostics, and configuration of the communication-specific parameters via the graphic display keypad.

Buy: www.ValinOnline.com | Phone 844-385-3099 | Email: CustomerService@valin.com

INSTALLATION

☐ **1 Consult the Installation Manual**

Tips:

- **Before you start programming, complete the user setting tables, page 267.**
- **Perform an auto-tuning operation to optimize performance, page 39.**
- **If you get lost, return to the factory settings, page 240.**

☞ ***Note: Check that the wiring of the drive is compatible with its configuration.***

PROGRAMMING

■ **2 Power up without run command**

- ☐ **If you are using a separate power supply for the control section, follow the instructions on page 12.**

■ **3 Select the language**

■ **4 Configure the [SIMPLY START] (S IM -) menu**

- ☐ **2-wire or 3-wire control**
- ☐ **Macro configuration**
- ☐ **Motor parameters**
  ☞ ***Perform an auto-tuning operation***
- ☐ **Motor thermal current**
- ☐ **Acceleration and deceleration ramps**
- ☐ **Speed variation range**

■ **5 Start**

Buy: www.ValinOnline.com | Phone 844-385-3099 | Email: CustomerService@valin.com

Factory configuration

Drive factory settings

The MT Series is factory-set for the most common operating conditions:

- Macro configuration: Start/Stop
- **Motor** frequency: 60 Hz
- Constant torque application, with sensorless flux vector control
- Normal stop mode on deceleration ramp
- Stop mode in the event of a fault: freewheel
- Linear, acceleration and deceleration ramps: 3 seconds
- Low speed: 0 Hz
- High speed: 60 Hz
- Motor thermal current = rated drive current
- Standstill injection braking current = 0.7 x rated drive current, for 0.5 seconds
- No automatic starts after a fault
- Switching frequency 2.5 kHz or 4 kHz depending on drive rating
- Logic inputs:
  - LI1: forward, LI2: Forward (2 operating direction), 2-wire control on transition
  - L13, L14, LI5, LI6: inactive (not assigned)
- Analog inputs:
  - AI1: speed reference 0 +10 V
  - AI2: 0-20 mA, inactive (not assigned)
- Relay R1: The contact opens in the event of a fault (or drive off).
- Relay R2: Inactive (not assigned)
- Analog output AO1: 0-20 mA, inactive (not assigned)

If the above values are compatible with the application, the drive can be used without changing the settings.

Option card factory settings

The option card inputs/outputs are not factory-set.

Buy: www.ValinOnline.com | Phone 844-385-3099 | Email: CustomerService@valin.com

Application functions

The tables on the following pages show the most common combinations of functions and applications, in order to guide your selection. The applications in these tables relate to the following machines in particular:

- **Hoisting:** cranes, overhead cranes, gantries (vertical hoisting, translation, slewing), lifting platforms
- **Elevators:** elevators in retrofit up to 1.2 m/s
- **Handling:** palletizers/depalletizers, conveyors, roller tables
- **Packing:** carton packers, labeling machines
- **Textiles:** weaving looms, carding frames, washing machines, spinners, drawing frames
- **Wood:** automatic lathes, saws, milling
- **High inertia:** centrifuges, mixers, unbalanced machines (beam pumps, presses)
- **Process**

Each machine has its own special features, and the combinations listed here are neither mandatory nor exhaustive.

Some functions are designed specifically for a particular application. In this case, the application is identified by a tab in the margin on the relevant programming pages.

Motor control functions

Functions	Page	Applications							
		Hoisting	Lifts	Handling	Packing	Textiles	Wood	High inertia	Process
V/f ratio	66			■			■	■	
Sensorless flux vector control	66	■	■	■	■	■	■	■	■
Flux vector control with sensor	66	■	■	■	■	■	■	■	■
2-point vector control	66	■				■			
Open-loop synchronous motor	66					■			
Output frequency of up to 1600 Hz	64					■	■		
Motor overvoltage limiting	77					■	■		
DC bus connection (see User's Manual)	-					■			■
Motor fluxing using a logic input	147	■		■	■				
Switching frequency of up to 16 kHz	76		■			■	■		
Auto-tuning	65	■	■	■	■	■	■	■	■

Buy: www.ValinOnline.com | Phone 844-385-3099 | Email: CustomerService@valin.com

Functions on speed references

Functions	Page	Applications							
		Hoisting	Lifts	Handling	Packing	Textiles	Wood	High inertia	Process
Differential bipolar reference	85	■		■	■				
Reference delinearization (magnifying glass effect)	87	■		■					
Frequency control input	119					■			■
Reference switching	123 - 129				■				
Reference summing	128				■				
Reference subtraction	128				■				
Reference multiplication	128				■				
S ramps	131	■	■	■					
Jog operation	138			■		■			■
Preset speeds	139	■	■	■	■			■	
+ speed / - speed using single action pushbuttons (1 step)	142								■
+ speed / - speed using double action pushbuttons (2 steps)	142	■							
+/- speed around a reference	144					■			■
Save reference	146								■

Buy: www.ValinOnline.com | Phone 844-385-3099 | Email: CustomerService@valin.com

Application-specific functions

Functions	Page	Applications							
		Hoisting	Lifts	Handling	Packing	Textiles	Wood	High inertia	Process
Fast stop	134						■	■	
Limit switch management	148	■	■	■					
Brake control	150	■	■	■					
Load measurement	159	■	■						
High-speed hoisting	161	■							
Rope slack	164	■							
PID regulator	166								■
Torque monitoring	175			■		■			■
Motor/generator torque limit	178			■		■		■	■
Load sharing	79	■		■					
Line contactor control	182	■		■			■		
Output contactor control	184		■						
Positioning by limit switches or sensors	186			■	■				
Stop at distance calculated after deceleration limit switch	188			■	■				
ENA system (mechanical with unbalanced load)	74							■	
Parameter switching	191	■	■	■	■	■	■	■	■
Motor or configuration switching	194	■		■	■				
Traverse control	197					■			
Stop configuration	134			■		■	■	■	
Evacuation	204		■						
Half floor	205		■						

Buy: www.ValinOnline.com | Phone 844-385-3099 | Email: CustomerService@valin.com

Safety functions/fault management

Functions	Page	Applications							
		Hoisting	Lifts	Handling	Packing	Textiles	Wood	High inertia	Process
Power Removal (safety function, see User's Manual)	-	■	■	■	■	■	■	■	■
Deferred stop on thermal alarm	216		■						
Alarm handling	109	■	■	■	■	■	■	■	■
Fault management	208 to 230	■	■	■	■	■	■	■	■
IGBT tests	219	■	■	■	■	■	■	■	■
Catch a spinning load	212					■	■	■	
Braking resistor thermal protection	228	■	■	■	■				
Motor protection with PTC probes	208	■	■	■	■	■	■	■	■
Undervoltage management	218					■	■	■	
4-20mA loss	220	■	■	■		■	■		■
Uncontrolled output cut (output phase loss)	214			■					
Automatic restart	211			■					
Use of the "Pulse input" input to measure the speed of rotation of the motor.	224	■	■	■					
Load variation detection	226	■							

Buy: www.ValinOnline.com | Phone 844-385-3099 | Email: CustomerService@valin.com

Turning on and configuring the drive

⚠ DANGER

UNINTENDED EQUIPMENT OPERATION

- Before turning on and configuring the MT Series, check that the PWR (POWER REMOVAL) input is deactivated (programmed to 0) in order to prevent unintended operation.
- Before turning on the drive, or when exiting the configuration menus, check that the inputs assigned to the run command are deactivated (programmed to 0) since they can cause the motor to start immediately.

Failure to follow these instructions will result in death or serious injury.

CAUTION

INCOMPATIBLE LINE VOLTAGE

Before turning on and configuring the drive, ensure that the line voltage is compatible with the supply voltage range shown on the drive nameplate. The drive may be damaged if the line voltage is not compatible.

Failure to follow this instruction can result in equipment damage.

Separate control section power supply

When the drive control section is powered independently of the power section (P24 and 0V terminals), whenever an option card is added or replaced, only the power section must be supplied with power next time the drive is powered up.
By default the new card would not be recognized and it would be impossible to configure it, thereby causing the drive to lock in fault mode.

Power switching via line contactor

CAUTION

- **Avoid operating the contactor frequently (premature ageing of the filter capacitors).**
- **Cycle times < 60 s may result in damage to the pre-charge resistor.**

Failure to follow this instruction can result in equipment damage.

User adjustment and extension of functions

- The display unit and buttons can be used to modify the settings and to extend the functions described in the following pages.
- **Return to factory settings** is made easy by the [1.12 FACTORY SETTINGS] (FCS-) menu, see page 238.
- There are three types of parameters:
  - Display: Values displayed by the drive
  - Adjustment: Can be changed during operation or when stopped
  - Configuration: Can only be modified when stopped and no braking is taking place. Can be displayed during operation.

⚠ DANGER

UNINTENDED EQUIPMENT OPERATION

- Check that changes made to the settings during operation do not present any danger.
- We recommend stopping the drive before making any changes.

Failure to follow these instructions will result in death or serious injury.

Buy: www.ValinOnline.com | Phone 844-385-3099 | Email: CustomerService@valin.com

Starting

Important:

- In factory settings mode, the motor can only be supplied with power once the “forward”, “reverse” and “DC injection stop” commands have been reset:
  - On power-up or a manual fault reset or after a stop command

  If they have not been reset, the drive will display "nSt" but will not start.
- If the automatic restart function has been configured ([Automatic restart] (Atr) parameter in the [1.8-FAULT MANAGEMENT] (FLt-) menu, see page 214), these commands are taken into account without a reset being necessary.

Test on a low power motor or without a motor

- In factory settings mode, [Output Phase Loss] detection (OPL) page 214 is active (OPL = YES). To check the drive in a test or maintenance environment without having to switch to a motor with the same rating as the drive (particularly useful in the case of high power drives), deactivate [Output Phase Loss] (OPL = no).
- Configure [Motor control type] (Ctt) = [V/F 2pts] (UF2) or [V/F 5pts] (UF5) ([1.4-MOTOR CONTROL] (drC-) menu, see page 66)

CAUTION

- Motor thermal protection will not be provided by the drive if the motor current is less than 0.2 times the rated drive current. Provide an alternative means of thermal protection.

Failure to follow this instruction can result in equipment damage.

Using motors in parallel

- Configure [Motor control type] (Ctt) = [V/F 2pts] (UF2) or [V/F 5pts] (UF5) ([1.4-MOTOR CONTROL] (drC-) menu, see page 66)

CAUTION

- Motor thermal protection is no longer provided by the drive. Provide an alternative means of thermal protection on every motor.

Failure to follow this instruction can result in equipment damage.

Buy: www.ValinOnline.com | Phone 844-385-3099 | Email: CustomerService@valin.com

Graphic display keypad

The graphic display keypad is standard on all series drives. The graphic display keypad can be disconnected and reconnected remotely (on the door of an enclosure for example) using the cables and accessories available as options (see catalog).

Description of keypad

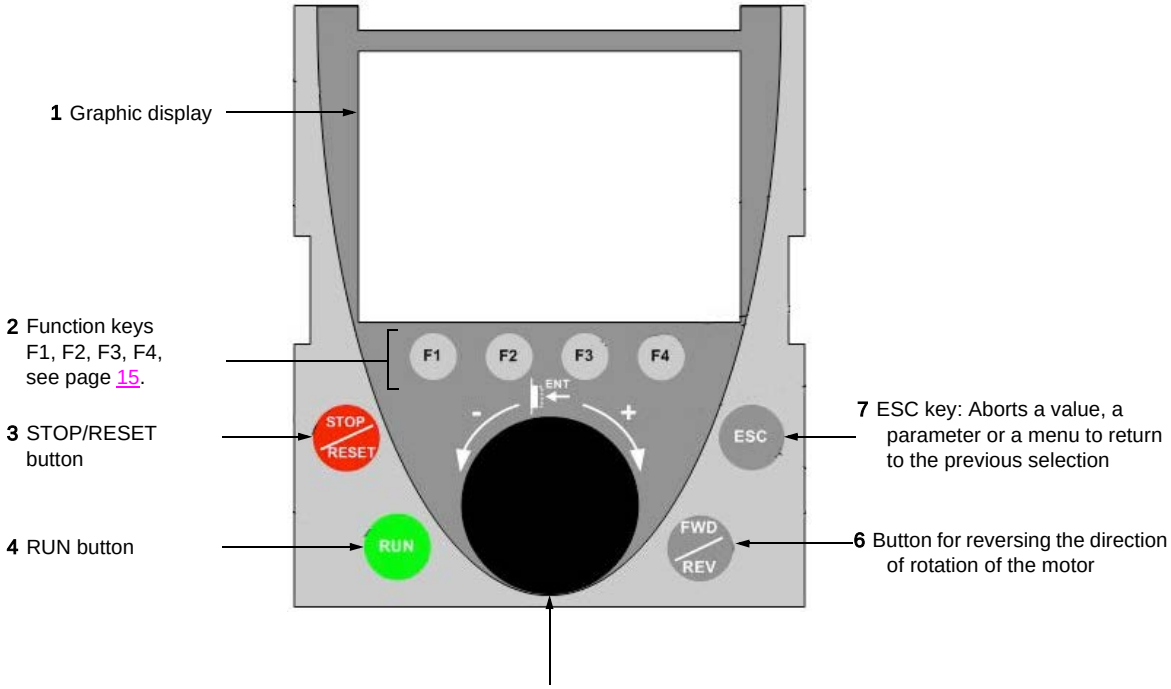

Buy: www.ValinOnline.com | Phone 844-385-3099 | Email: CustomerService@valin.com

Description of the graphic screen

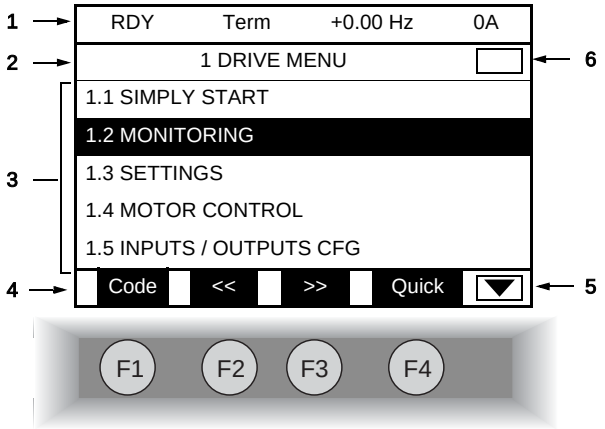

1. Display line. Its content can be configured; the factory settings show:
   - The drive state (see page 16)
   - The active control channel:
     - Term: Terminals
     - HMI: Graphic display terminal
     - MDB: Integrated Modbus
     - CAN: Integrated CANopen
     - NET: Communication card
   - Frequency reference
   - Current in the motor

2. Menu line. Indicates the name of the current menu or submenu.

3. Menus, submenus, parameters, values, bar charts, etc., are displayed in drop-down window format on a maximum of 5 lines.
   The line or value selected by the navigation button is displayed in a highlighted curser.

4. Section displaying the functions assigned to the F1 to F4 keys and aligned with them, for example:

   - Code F1 : Displays the code of the selected parameter, i.e., the code corresponding to the 7-segment display.
   - HELP F1 : Contextual help
   - << F2 : Navigate horizontally to the left, or go to previous menu/submenu or, for a value, go to the next digit up, displayed in a highlighted curser (see the example on page 17).
   - >> F3 : Navigate horizontally to the right or go to next menu/submenu (going to the [2 ACCESS LEVEL] menu in this example) or, for a value, go to the next digit down, displayed in a highlighted curser (see the example on page 17).
   - Quick F4 : Quick navigation, see page 21.

The function keys are dynamic and contextual.
Other functions (application functions) can be assigned to these keys via the [1.6 COMMAND] menu.

5. Indicates that there are no more levels below this display window.
   Indicates that there are more levels below this display window.

6. Indicates that this display window does not scroll further up.
   Indicates that there are more levels above this display window.

Buy: www.ValinOnline.com | Phone 844-385-3099 | Email: CustomerService@valin.com

Drive state codes:

- ACC: Acceleration
- CLI: Current limit
- CTL: Controlled stop on input phase loss
- DCB: DC injection braking in progress
- DEC: Deceleration
- FLU: Motor fluxing in progress
- FST: Fast stop
- NLP: No line power (no line supply on L1, L2, L3)
- NST: Freewheel stop
- OBR: Auto-adapted deceleration
- PRA: Power Removal function active (drive locked)
- RDY: Drive ready
- RUN: Drive running
- SOC: Controlled output cut in progress
- TUN: Auto-tuning in progress
- USA: Undervoltage alarm

Buy: www.ValinOnline.com | Phone 844-385-3099 | Email: CustomerService@valin.com

Example configuration windows:

```
RDY        Term    +0.00Hz    0A
        5 LANGUAGE
English
Français                      ✓
Deutsch
Español
Italiano
        <<        >>        Quick
Chinese
```

When only one selection is possible, the selection made is indicated by ✓
Example: Only one language can be chosen.

```
PARAMETER SELECTION
        1.3 SETTINGS
Ramp increment        [✓]
Acceleration          [✓]
Deceleration          [ ]
Acceleration 2        [ ]
Deceleration 2        [ ]
                      Edit
```

When multiple selection is possible, the selections made are indicated by [✓]
Example: A number of parameters can be chosen to form the [USER MENU].

Example configuration window for one value:

```
RDY        Term    +0.00Hz    0A
   Acceleration

        9.51 s

Min = 0.01              Max = 99.99
        <<        >>        Quick
```

>>

```
RDY        Term    +0.00Hz    0A
   Acceleration

        951 s

Min = 0.01              Max = 99.99
        <<        >>        Quick
```

The << and >> arrows (keys F2 and F3) are used to select the digit to be modified, and the navigation button is rotated to increase or decrease this number.

Buy: www.ValinOnline.com | Phone 844-385-3099 | Email: CustomerService@valin.com

First power-up - [5. LANGUAGE] menu

The first time the drive is powered up, the user will automatically be guided through the menus as far as [1. DRIVE MENU].
The parameters in the [1.1 SIMPLY START] submenu must be configured and auto-tuning performed before the motor is started up.

```
MOTORTRONICS
MT403U22N4
2.2kW/3HP 380/480V
Config. n°1
```

Displays for 3 seconds following power-up

3 seconds ↓

```
5 LANGUAGE
English
Français                ✓
Deutsch
Español
Italiano
Chinese
```

Automatically switches to [5 LANGUAGE] menu 3 seconds later.
Select the language and press ENT.

↓

```
RDY     Term    +0.00Hz    0.0A
2 ACCESS LEVEL
Basic
Standard                ✓
Advanced
Expert
```

Switches to [2 ACCESS LEVEL] menu (see page 27)
Select the access level and press ENT.

↓

```
RDY     Term    +0.00Hz    0.0A
1 DRIVE MENU
1.1 SIMPLY START
1.2. MONITORING
1.3. SETTINGS
1.4. MOTOR CONTROL
1.5. INPUTS / OUTPUTS CFG
Code    <<      >>         Quick
```

Switches to [1 DRIVE MENU] (see page 23)

ESC ↓

```
RDY     Term    +0.00Hz    0.0A
MAIN MENU
1 DRIVE MENU
2 ACCESS LEVEL
3 OPEN / SAVE AS
4 PASSWORD
5 LANGUAGE
Code                       Quick
```

Press ESC to return to [MAIN MENU]

Buy: www.ValinOnline.com | Phone 844-385-3099 | Email: CustomerService@valin.com

Subsequent power ups

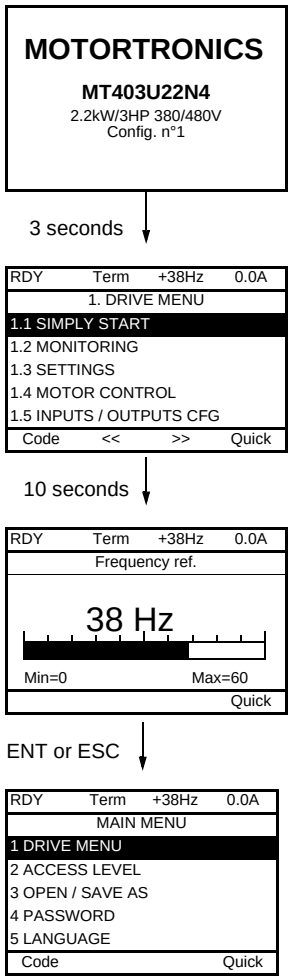

Switches to [1. DRIVE MENU] 3 seconds later.

If no operator inputs are made, switches to "Display" automatically 10 seconds later (the display will vary depending on the selected configuration).

Users can return to [MAIN MENU] by pressing ENT or ESC.

Buy: www.ValinOnline.com | Phone 844-385-3099 | Email: CustomerService@valin.com

Programming: Example of accessing a parameter

Accessing the acceleration ramp

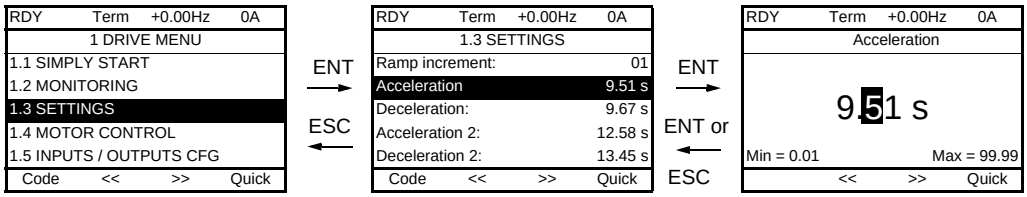

Note:

- To select a parameter:
  - Turn the navigation button to scroll vertically.
- To modify a parameter:
  - Use the << and >> keys (F2 and F3) to scroll horizontally and select the digit to be modified (the selected digit changes to white on a black background).
  - Turn the navigation button to modify the digit.
- To cancel the modification:
  - Press ESC.
- To save the modification:
  - Press the navigation button (ENT).

Buy: www.ValinOnline.com | Phone 844-385-3099 | Email: CustomerService@valin.com

Quick navigation

If the "Quick" function is displayed above the F4 key, you can gain quick access to a parameter from any screen.

Example:

```
RDY        Term    +0.00Hz    0A
      1.4 MOTOR CONTROL
Standard mot. freq:        60Hz
Rated motor power:   0.37 kW (0.5 HP)
Rated motor volt.:          206 V
Rated mot. current:           1.0 A
Rated motor freq.:           60.0 Hz
 Code      <<        >>      Quick
```

Press F4 to access the Quick screen, which contains 4 selection options.

```
RDY        Term    +0.00Hz    0A
      QUICK NAVIGATION
RETURN TO MAIN MENU
DIRECT ACCESS TO...
10 LAST MODIFICATIONS
GOTO MULTIPOINT SCREEN

 Code
```

ENT →

```
RDY        Term    +0.00Hz    0A
      MAIN MENU
1 DRIVE MENU
2 ACCESS LEVEL
3 OPEN / SAVE AS
4 PASSWORD
5 LANGUAGE
 Code                        Quick
```

- [HOME]: Return to [MAIN MENU].

See page 255

- [DIRECT ACCESS TO...] : Opens the direct access window, which will contain the text "1". The function keys << and >> (F2 and F3) can be used to select each of the numbers and the navigation button to increment or decrement the numbers: 1.3 in the example below.

```
RDY        Term    +0.00Hz    0A
      DIRECT ACCESS TO...

            1.3

          SETTINGS

        <<        >>
```

ENT →

```
RDY        Term    +0.00Hz    0A
      1.3 SETTINGS
Ramp increment:                01
Acceleration                9.51 s
Deceleration:               9.67 s
Acceleration 2:            12.58 s
Deceleration 2:            13.45 s
 Code      <<        >>      Quick
```

- [10 LAST MODIFICATIONS]: Opens a window in which the last 10 parameters modified can be accessed directly.

```
RDY        Term    +0.00Hz    0A
      10 LAST MODIFICATIONS
Acceleration:              10 s
ENA prop.gain:              1.2
Rated mot. current:         15 A
Preset speed 4:        20 Hz
Preset speed 5:        30 Hz
 Code
```

ENT →
← ESC

```
RDY        Term    +0.00Hz    0A
      Rated mot. current

            15.0 A

        <<        >>
```


Buy: www.ValinOnline.com | Phone 844-385-3099 | Email: CustomerService@valin.com

[MAIN MENU] - Menu mapping

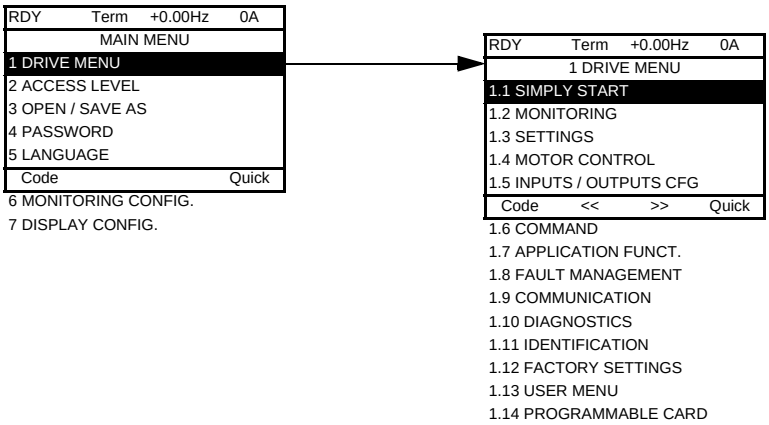

Content of [MAIN MENU] menus

[1 DRIVE MENU]	See next page
[2 ACCESS LEVEL]	Defines which menus can be accessed (level of complexity)
[3 OPEN / SAVE AS]	Can be used to save and recover drive configuration files
[4 PASSWORD]	Provides password protection for the configuration
[5 LANGUAGE]	Language selection
[6 MONITORING CONFIG.]	Customization of information displayed on the graphic display terminal during operation
[7 DISPLAY CONFIG.]	• Customization of parameters • Creation of a customized user menu • Customization of the visibility and protection mechanisms for menus and parameters

Buy: www.ValinOnline.com | Phone 844-385-3099 | Email: CustomerService@valin.com

[1 DRIVE MENU]

```
RDY        Term    +0.00Hz     0A
            1 DRIVE MENU
1.1 SIMPLY START
1.2 MONITORING
1.3 SETTINGS
1.4 MOTOR CONTROL
1.5 INPUTS / OUTPUTS CFG
 Code       <<        >>      Quick
1.6 COMMAND
1.7 APPLICATION FUNCT.
1.8 FAULT MANAGEMENT
1.9 COMMUNICATION
1.10 DIAGNOSTICS
1.11 IDENTIFICATION
1.12 FACTORY SETTINGS
1.13 USER MENU
1.14 PROGRAMMABLE CARD
```

Content of [1. DRIVE MENU] menus:

[1.1 SIMPLY START]:	Simplified menu for a quick start
[1.2 MONITORING]:	Visualization of current, motor and input/output values
[1.3 SETTINGS]:	Accesses the adjustment parameters, which can be modified during operation
[1.4 MOTOR CONTROL]:	Motor parameters (motor nameplate, auto-tuning, switching frequency, control algorithms, etc.)
[1.5 INPUTS / OUTPUTS CFG]:	I/O configuration (scaling, filtering, 2-wire control, 3-wire control, etc.)
[1.6 COMMAND]:	Configuration of command and reference channels (graphic display terminal, terminals, bus, etc.)
[1.7 APPLICATION FUNCT.] :	Configuration of application functions (e.g., preset speeds, PID, brake logic control, etc.)
[1.8 FAULT MANAGEMENT]:	Configuration of fault management
[1.9 COMMUNICATION]:	Communication parameters (fieldbus)
[1.10 DIAGNOSTICS]:	Motor/drive diagnostics
[1.11 IDENTIFICATION]:	Identifies the drive and the internal options
[1.12 FACTORY SETTINGS]:	Access to configuration files and return to factory settings
[1.13 USER MENU]:	Specific menu set up by the user in the [7. DISPLAY CONFIG.] menu
[1.14 PROGRAMMABLE CARD]: :	N/A

Buy: www.ValinOnline.com | Phone 844-385-3099 | Email: CustomerService@valin.com

Integrated display keypad

All MT Series drives also include an integrated display terminal with a 7-segment 4-digit display. The graphic display keypad described on the previous pages and the integrated keypad are included as standard.

Functions of the display and the keys

- 2 Modbus status LEDs
- Four 7-segment displays
- Returns to the previous menu or parameter, or increases the displayed value
- Goes to the next menu or parameter, or decreases the displayed value
- 2 CANopen status LEDs
- Exits a menu or parameter, or aborts the displayed value to return to the previous value in the memory
- Enters a menu or parameter, or saves the displayed parameter or value

Note: **• Pressing ▲ or ▼ does not store the selection.**

• Press and hold down (>2 s) ▲ or ▼ to scroll through the data quickly.

Save and store the selection: ENT

The display flashes when a value is stored.

Normal display, with no fault present and no startup:

- 43.0 : Display of the parameter selected in the SUP menu (default selection: motor frequency)
- CLI: Current limit
- CtL: Controlled stop on input phase loss
- dCb: DC injection braking in progress
- FLU: Motor fluxing in progress
- FSt: Fast stop.
- nLP: No line power (no line supply on L1, L2, L3)
- nSt: Freewheel stop
- Obr: Auto-adapted deceleration
- PrA: Power Removal function active (drive locked)
- rdY = Drive ready
- SOC: Controlled output cut in progress
- tUn: Auto-tuning in progress
- USA: Undervoltage alarm

The display flashes to indicate the presence of a fault.

Buy: www.ValinOnline.com | Phone 844-385-3099 | Email: CustomerService@valin.com

Accessing menus

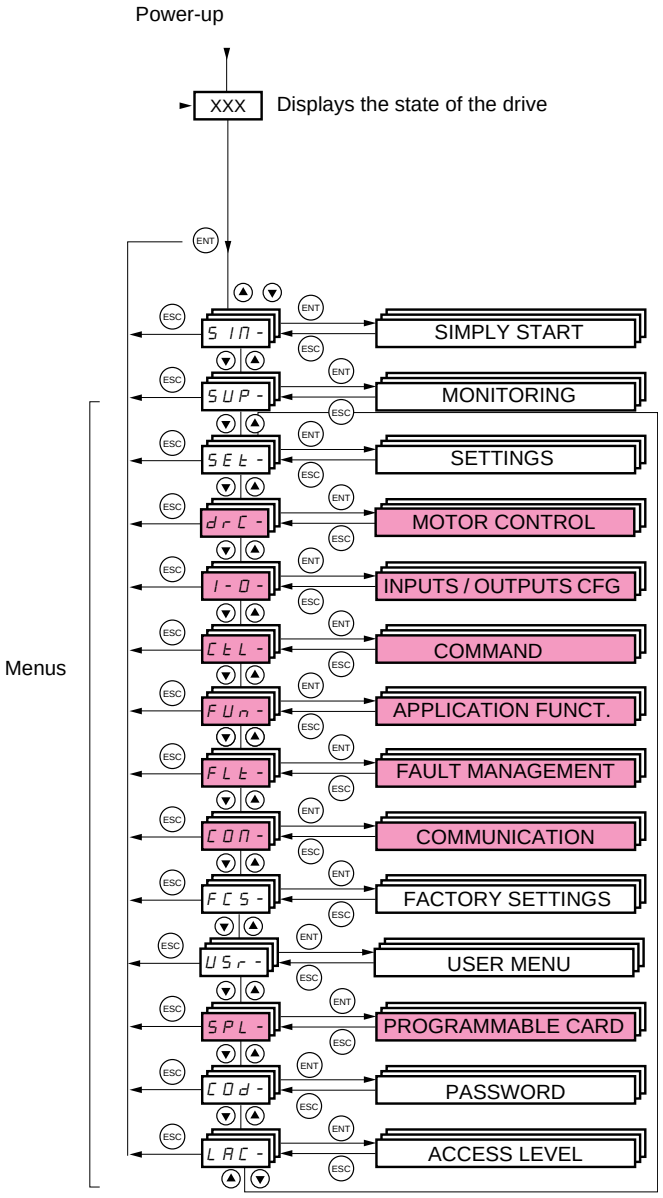

(page 33) Simplified menu for fast startup

(page 41) Visualization of current, motor and input/output values

(page 49) Adjustment parameters, can be modified during operation

(page 65) Motor parameters (motor nameplate, auto-tuning, switching frequency, control algorithms, etc.)

(page 82) I/O configuration (scaling, filtering, 2-wire control, 3-wire control, etc.)

(page 110) Configuration of command and reference channels (graphic display terminal, terminals, bus, etc.)

(page 123)Configuration of application functions (e.g., preset speeds, PID, brake logic control, etc.)

(page 207) Configuration of fault management

(page 231) Communication parameters (fieldbus)

(page 238) Access to configuration files and return to factory settings

(page 241) Specific menu, set up by the user using the graphic display keypad.

(page 245) .Not used

(page 244)

(page 27)

A dash appears after menu and submenu codes to differentiate them from parameter codes.
Examples: FUn- menu, ACC parameter.

The grayed-out menus may not be accessible depending on the control access (LAC) configuration.

Buy: www.ValinOnline.com | Phone 844-385-3099 | Email: CustomerService@valin.com

Accessing menu parameters

Save and store the displayed selection : ENT

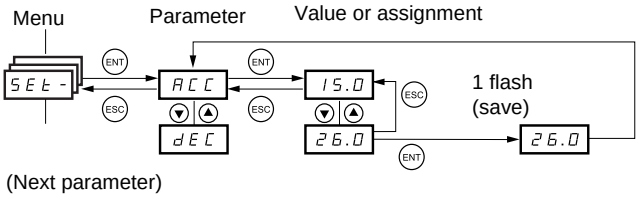

The display flashes when a value is stored.

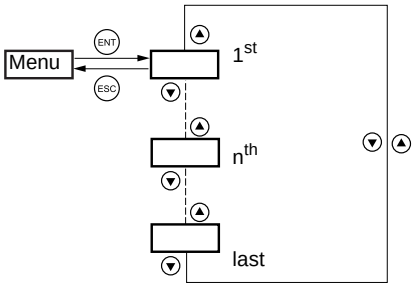

All the menus are "drop-down" type menus, which means that after the last parameter, if you continue to press ▼ , you will return to the first parameter and, conversely, you can switch from the first parameter to the last parameter by pressing ▲ .

Selection of multiple assignments for one parameter

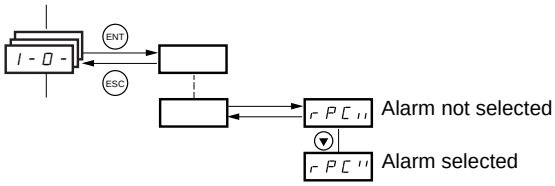

Example: List of group 1 alarms in [INPUTS / OUTPUTS CFG] menu (I-O-)

A number of alarms can be selected by "checking" them as follows.

The digit on the right indicates: selected

not selected.

The same principle is used for all multiple selections.

Buy: www.ValinOnline.com | Phone 844-385-3099 | Email: CustomerService@valin.com

Using graphic display keypad

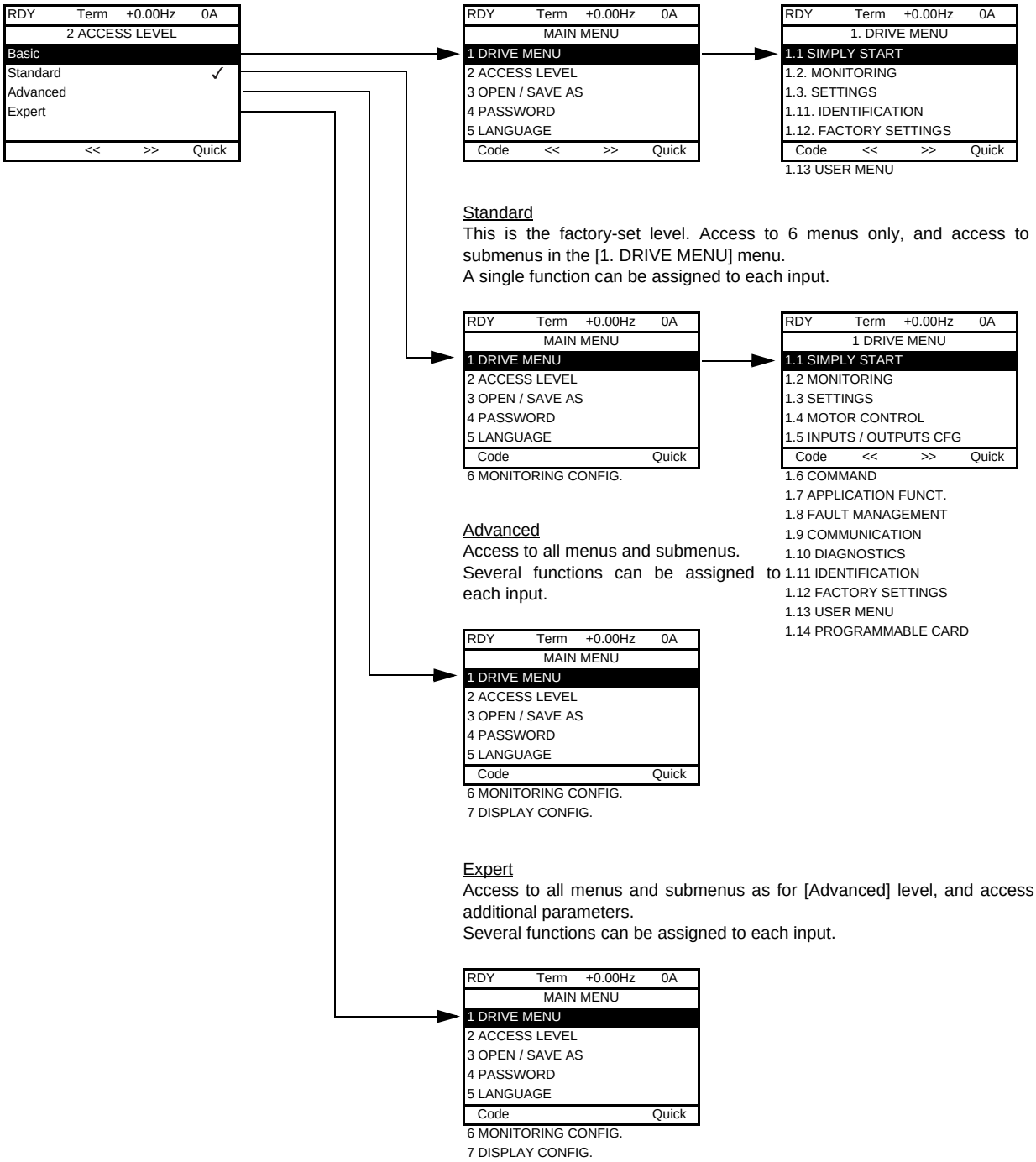

Buy: www.ValinOnline.com | Phone 844-385-3099 | Email: CustomerService@valin.com

Using integrated display keypad:

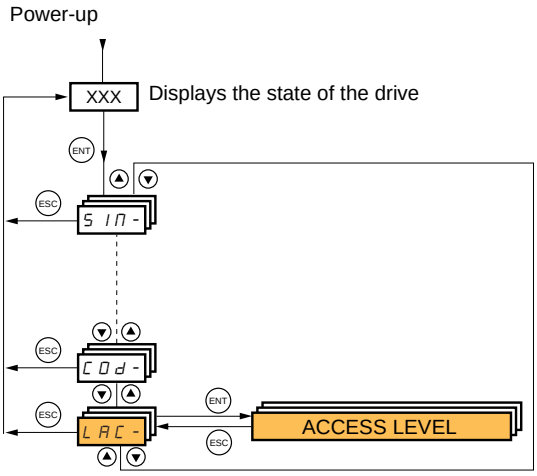

Code	Name/Description	Factory setting
LAC-		Std
bAS	• bAS: Limited access to SIM, SUP, SEt, FCS, USr, COd and LAC menus. Only one function can be assigned to each input.	
Std	• Std: Access to all menus on the integrated display terminal. Only one function can be assigned to each input.	
AdU	• AdU: Access to all menus on the integrated display terminal. Several functions can be assigned to each input.	
EPr	• EPr: Access to all menus on the integrated display terminal and access to additional parameters. Several functions can be assigned to each input.	

Buy: www.ValinOnline.com | Phone 844-385-3099 | Email: CustomerService@valin.com

Comparison of the menus that can be accessed on the graphic display keypad vs/ integrated display keypad

Graphic display keypad		Integrated display keypad	Access level
[2 ACCESS LEVEL]		LAC - (Access level)	Basic bAS
[3 OPEN/SAVE AS]		-	
[4 PASSWORD]		COd - (Password)	
[5 LANGUAGE]		-	
[1 DRIVE MENU]	[1.1 SIMPLY START]	SIM - (Simply start)	
	[1.2 MONITORING]	SUP - (Monitoring)	
	[1.3 SETTINGS]	SEt - (Settings)	
	[1.11 IDENTIFICATION]	-	
	[1.12 FACTORY SETTINGS]	FCS - (Factory settings)	
	[1.13 USER MENU]	USr - (User menu)	
A single function can be assigned to each input.		A single function can be assigned to each input.	
	[1.4 MOTOR CONTROL]	drC - (Motor control)	Standard StD (factory setting)
	[1.5 INPUTS / OUTPUTS CFG]	I-O - (I/O configuration)	
	[1.6 COMMAND]	CtL - (Command)	
	[1.7 APPLICATION FUNCT.]	FUn - (Application functions)	
	[1.8 FAULT MANAGEMENT]	FLt - (Fault management)	
	[1.9 COMMUNICATION]	COM - (Communication)	
	[1.10 DIAGNOSTICS]	- N/A	
	[1.14 PROGRAMMABLE CARD] (1)	-	
[6 MONITORING CONFIG.]		-	
A single function can be assigned to each input.		A single function can be assigned to each input.	
[7 DISPLAY CONFIG.]		-	Advanced AdU
Several functions can be assigned to each input.		Several functions can be assigned to each input.	
Expert parameters		Expert parameters	Expert EPr
Several functions can be assigned to each input.		Several functions can be assigned to each input.	

Buy: www.ValinOnline.com | Phone 844-385-3099 | Email: CustomerService@valin.com

The parameter tables in the descriptions of the various menus can be used with both the graphic display keypad and the integrated display keypad. They, therefore, contain information for these two keypads in accordance with the description below.

Example:

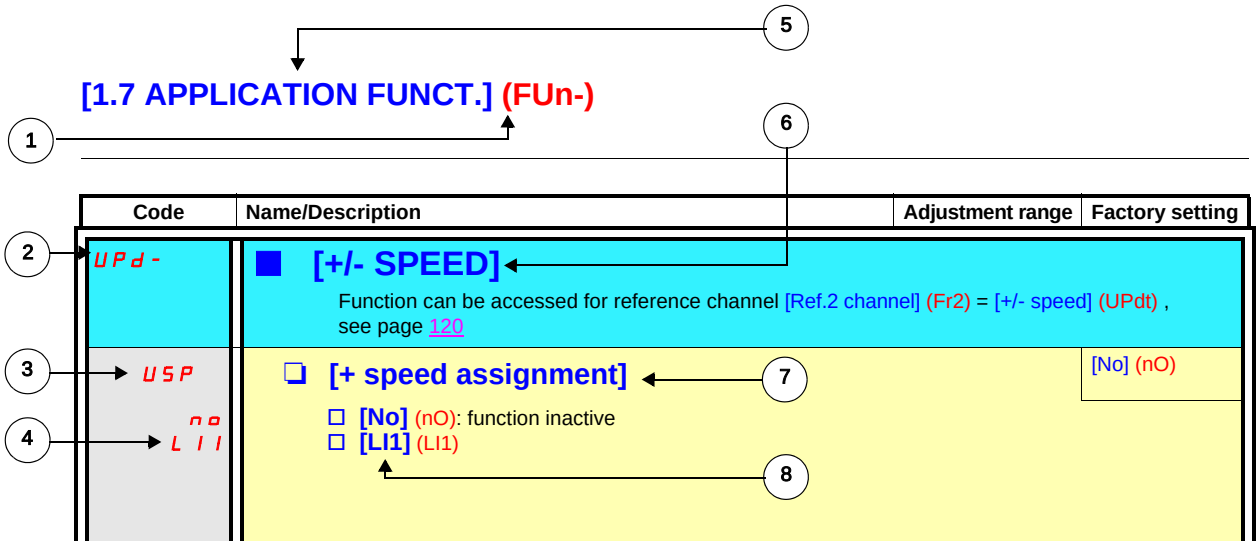

1. Name of menu on 4-digit 7-segment display.
2. Submenu code on 4-digit 7-segment display.
3. Parameter code on 4-digit 7-segment display.
4. Parameter value on 4-digit 7-segment display.
5. Name of menu on graphic display keypad.
6. Name of submenu on graphic display keypad.
7. Name of parameter on graphic display keypad.
8. Value of parameter on graphic display keypad.

Note :

- The text in square brackets [ ] indicates what you will see on the graphic display keypad.
- The factory settings correspond to [Macro configuration] (CFG) = [Start/Stop] (StS). This is the macro configuration set at the factory.

Buy: www.ValinOnline.com | Phone 844-385-3099 | Email: CustomerService@valin.com

Interdependence of parameter values

The configuration of certain parameters modifies the adjustment range of other parameters, in order to reduce the risk of errors. **This may result in the modification of a factory setting or a value you have already selected.**

Example:

1. [Current Limitation] (CLI) page 56 set to 1.6 In or left at its factory setting, 1.5 In
2. [Switching freq.] (SFr) page 56 set to 1 kHz (and confirmed with "ENT") restricts [Current Limitation] (CLI) to 1.36 In
3. If [Switching freq.] (SFr) is increased to 4 kHz, [Current limitation] (CLI) is no longer restricted, **but remains at 1.36 In**. If you require 1.6 In, you must **reset** [Current Limitation] (CLI).

Buy: www.ValinOnline.com | Phone 844-385-3099 | Email: CustomerService@valin.com

Finding a parameter in this document

The following assistance with finding explanations on a parameter is provided:

- **With the integrated display keypad:** Direct use of the parameter code index, page 266, to find the page giving details of the displayed parameter.
- **With the graphic display keypad:** Select the required parameter and press F1 : [Code]. The parameter code is displayed instead of its name while the key is held down.

  Example: ACC

RDY	Term	+0.00Hz	0A
1.3 SETTINGS			
Ramp increment:			01
Acceleration			9.51 s
Deceleration:			9.67 s
Acceleration 2:			12.58 s
Deceleration 2:			13.45 s
Code	<<	>>	Quick

Code →

RDY	Term	+0.00Hz	0A
1.3 SETTINGS			
Ramp increment:			01
ACC			9.51 s
Deceleration:			9.67 s
Acceleration 2:			12.58 s
Deceleration 2:			13.45 s
Code	<<	>>	Quick

Then use the parameter code index, page 266, to find the page giving details of the displayed parameter.

Buy: www.ValinOnline.com | Phone 844-385-3099 | Email: CustomerService@valin.com

Using graphic display keypad:(use this approach for fast and easy setup)

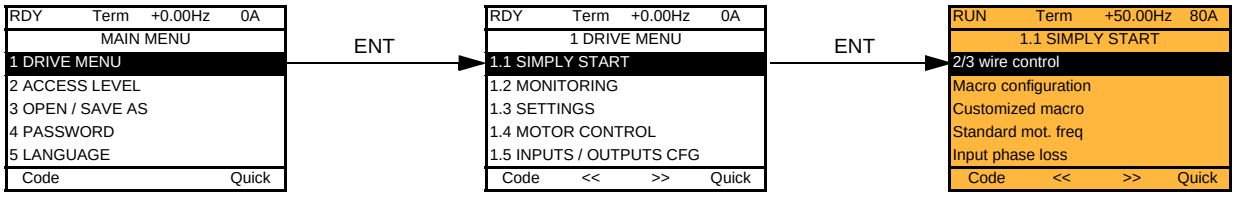

Using integrated display keypad:

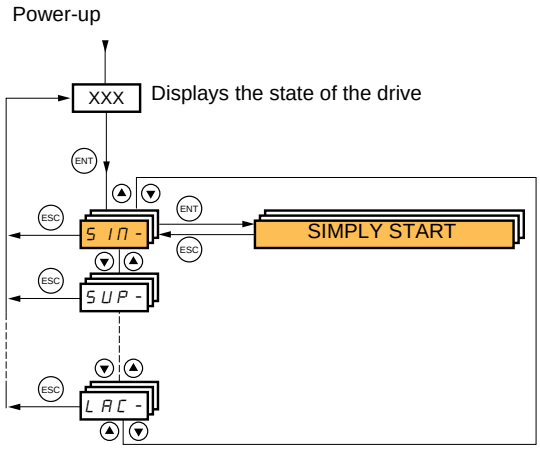

The [1.1-SIMPLY START] (SIM-) menu can be used for fast startup, which is sufficient for the majority of applications.

The parameters in this menu can only be modified when the drive is stopped and no run command is present, with the following exceptions:

- Auto-tuning, which causes the motor to start up
- The adjustment parameters on page 40

Note : The parameters of the [1.1 SIMPLY START] (SIM-) menu must be entered in the order in which they appear, as the later ones are dependent on the first ones.
For example [2/3 wire control] (tCC) must be configured before any other parameters.

The [1.1 SIMPLY START] (SIM-) menu should be configured **on its own or before the other drive configuration menus**. If a modification has previously been made to any of them, in particular in [1.4 MOTOR CONTROL] (drC-), some [1.1 SIMPLY START] (SIM-) parameters may be changed, for example, the motor parameters, if a synchronous motor has been selected. Returning to the [1.1 SIMPLY START] (SIM-) menu after modifying another drive configuration menu **is unnecessary** but does not pose any risk. Changes following modification of another configuration menu **are not described**, to avoid unnecessary complication in this section.

Macro configuration

Macro configuration provides a means of speeding up the configuration of functions for a specific field of application.
7 macro configurations are available:

- Start/stop (factory configuration)
- Handling
- General use
- Hoisting
- PID regulator
- Communication bus
- Master/slave

Selecting a macro configuration assigns the parameters in this macro configuration.

Each macro configuration can still be modified in the other menus.

Buy: www.ValinOnline.com | Phone 844-385-3099 | Email: CustomerService@valin.com

Macro configuration parameters

Assignment of the inputs/outputs

Input/ output	[Start/Stop]	[M. handling]	[Gen. Use]	[Hoisting]	[PID regul.]	[Network C.]	[Mast./ slave]
AI1	[Ref.1 channel]	[Ref.1 channel]	[Ref.1 channel]	[Ref.1 channel]	[Ref.1 channel] (PID reference)	[Ref.2 channel] ([Ref.1 channel] = integrated Modbus) (1)	[Ref.1 channel]
AI2	[No]	[Summing ref. 2]	[Summing ref. 2]	[No]	[PID feedback]	[No]	[Torque reference]
AO1	[No]	[No]	[No]	[No]	[No]	[No]	[No]
R1	[No drive flt]	[No drive flt]	[No drive flt]	[No drive flt]	[No drive flt]	[No drive flt]	[No drive flt]
R2	[No]	[No]	[No]	[Brk control]	[No]	[No]	[No]
LI1 (2-wire)	[Forward]	[Forward]	[Forward]	[Forward]	[Forward]	[Forward]	[Forward]
LI2 (2-wire)	[Reverse]	[Reverse]	[Reverse]	[Reverse]	[Reverse]	[Reverse]	[Reverse]
LI3 (2-wire)	[No]	[2 preset speeds]	[Jog]	[Fault reset]	[PID integral reset]	[Ref. 2 switching]	[Trq/spd switching]
LI4 (2-wire)	[No]	[4 preset speeds]	[Fault reset]	[External fault]	[2 preset PID ref.]	[Fault reset]	[Fault reset]
LI5 (2-wire)	[No]	[8 preset speeds]	[Torque limitation]	[No]	[4 preset PID ref.]	[No]	[No]
LI6 (2-wire)	[No]	[Fault reset]	[No]	[No]	[No]	[No]	[No]
LI1 (3-wire)	Stop	Stop	Stop	Stop	Stop	Stop	Stop
LI2 (3-wire)	[Forward]	[Forward]	[Forward]	[Forward]	[Forward]	[Forward]	[Forward]
LI3 (3-wire)	[Reverse]	[Reverse]	[Reverse]	[Reverse]	[Reverse]	[Reverse]	[Reverse]
LI4 (3-wire)	[No]	[2 preset speeds]	[Jog]	[Fault reset]	[PID integral reset]	[Ref. 2 switching]	[Trq/spd switching]
LI5 (3-wire)	[No]	[4 preset speeds]	[Fault reset]	[External fault]	[2 preset PID ref.]	[Fault reset]	[Fault reset]
LI6 (3-wire)	[No]	[8 preset speeds]	[Torque limitation]	[No]	[4 preset PID ref.]	[No]	[No]
Option cards							
LI7 to LI14	[No]	[No]	[No]	[No]	[No]	[No]	[No]
LO1 to LO4	[No]	[No]	[No]	[No]	[No]	[No]	[No]
R3/R4	[No]	[No]	[No]	[No]	[No]	[No]	[No]
AI3, AI4	[No]	[No]	[No]	[No]	[No]	[No]	[No]
RP	[No]	[No]	[No]	[No]	[No]	[No]	[No]
AO2	[I motor]	[I motor]	[I motor]	[I motor]	[I motor]	[I motor]	[I motor]
AO3	[No]	[Sign. torque]	[No]	[Sign. torque]	[PID Output]	[No]	[Motor freq.]
Graphic display terminal keys							
F1 key	[No]	[No]	[No]	[No]	[No]	Control via graphic display terminal	[No]
F2, F3, F4 keys	[No]	[No]	[No]	[No]	[No]	[No]	[No]

In 3-wire control, the assignment of inputs LI1 to LI6 shifts.

(1) To start with integrated Modbus [Modbus Address] (Add) must first be configured, page 233.

Note: These assignments are reinitialized every time the macro configuration changes.

Buy: www.ValinOnline.com | Phone 844-385-3099 | Email: CustomerService@valin.com

Macro configuration parameters

Other configurations and settings

In addition to the assignment of inputs/outputs, other parameters are assigned only in the Hoisting and Mast./slave macro configurations.

Hoisting:

- [Movement type] (bSt) = [Hoisting] (UEr) page 154
- [Brake contact] (bCI) = [No] (nO) page 154
- [Brake impulse] (bIP) = [No] (nO) page 154
- [Brake release I FW] (Ibr) = [Rated mot. current] (nCr) page 154
- [Brake Release time] (brt) = 0.5 s page 155
- [Brake release freq] (bIr) = [Auto] (AUtO) page 155
- [Brake engage freq] (bEn) = [Auto] (AUto) page 155
- [Brake engage time] (bEt) = 0.5 s page 155
- [Engage at reversal] (bEd) = [No] (nO) page 156
- [Jump at reversal] (JdC) = [Auto] (AUtO) page 156
- [Time to restart] (ttr) = 0 s page156
- [Current ramp time] (brr) = 0 s page 158
- [Low speed] (LSP) = Rated motor slip calculated by the drive, page 40
- [Output Phase Loss] (OPL) = [Yes] (YES) page 214. No further modifications can be made to this parameter.
- [Catch on the fly] (FLr) = [No] (nO) page 212. No further modifications can be made to this parameter.

Mast./slave:

- [Motor control type] (Ctt) = [SVC I] (CUC) page 66

Note: These assignments are forced every time the macro configuration changes, except for [Motor control type] (Ctt) for the Mast./slave macro configuration, if it is configured in [FVC] (FUC).

Return to factory settings:

Returning to factory settings with [Config. Source] (FCSI) = [Macro-Conf] (InI) page 240 will return the drive to the selected macro configuration. The [Macro configuration] (CFG) parameter does not change, although [Customized macro] (CCFG) disappears.

☞ **Note :**

- The factory settings that appear in the parameter tables correspond to [Macro configuration] (CFG) = [Start/Stop] (StS). This is the macro configuration set at the factory.

Buy: www.ValinOnline.com | Phone 844-385-3099 | Email: CustomerService@valin.com

Example diagrams for use with the macro configurations

[Hoisting] (HSt) diagram

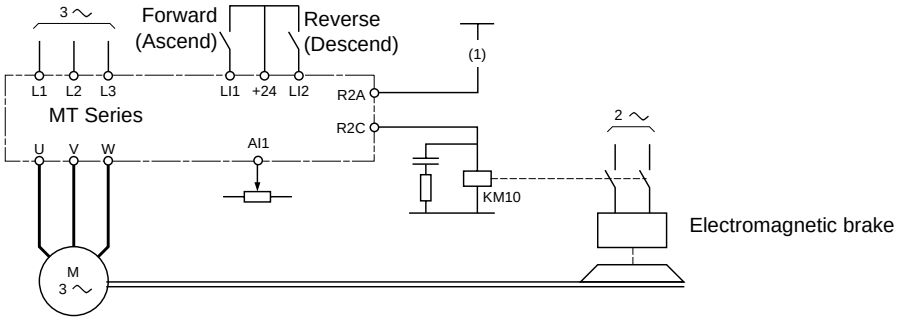

(1) A contact on the auxilliary safety relay must be inserted in the brake control circuit to engage it safely when the "Power Removal" safety function is activated (see connection diagrams in the Installation Manual).

[Mast./slave] (MSL) diagram

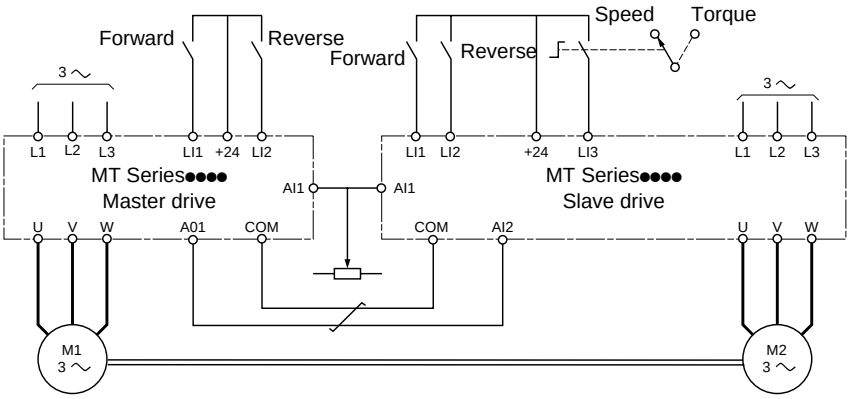

When the two motors are mechanically connected, the Speed/torque contact closing results in operation in Mast./slave mode. The master drive regulates the speed and controls the slave drive in torque mode to ensure distribution of the load.

Buy: www.ValinOnline.com | Phone 844-385-3099 | Email: CustomerService@valin.com

Code	Name/Description	Adjustment range	Factory setting
tCC	❑ **[2/3 wire control]**		[2 wire] (2C)
2C	☐ **[2 wire]** (2C)		
3C	☐ **[3 wire]** (3C)		

2-wire control: This is the input state (0 or 1) or edge (0 to 1 or 1 to 0), which controls running or stopping.

Example of "source" wiring:

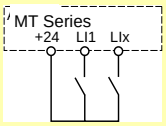

LI1: forward
LIx: reverse

3-wire control (pulse commands): A "forward" or "reverse" pulse is sufficient to command starting, a "stop" pulse is sufficient to command stopping.

Example of "source" wiring:

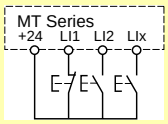

LI1: stop
LI2: forward
LIx: reverse

WARNING

UNINTENDED EQUIPMENT OPERATION

To change the assignment of [2/3 wire control] (tCC) press and hold down the “ENT” key for 2 s.
The following function will be returned to factory settings: [2 wire type] (tCt) page 83 as will all functions which assign logic inputs.
The macro configuration selected will also be reset it if has been customized (loss of custom settings).
Check that this change is compatible with the wiring diagram used.
Failure to follow these instructions can result in death or serious injury.

CFG	❑ **[Macro configuration]**		[Start/Stop] (StS)
StS	☐ **[Start/Stop]** (StS): Start/stop		
HdG	☐ **[M. handling]** (HdG): Handling		
HSt	☐ **[Hoisting]** (HSt): Hoisting		
GEn	☐ **[Gen. Use]** (GEn): General use		
PId	☐ **[PID regul.]** (PId): PID regulation		
nEt	☐ **[Network C.]** (nEt): Communication bus		
MSL	☐ **[Mast./slave]** (MSL): Master/slave		

WARNING

UNINTENDED EQUIPMENT OPERATION

To change the assignment of [Macro configuration] (CFG) press and hold down the “ENT” key for 2 s.
Check that the selected macro configuration is compatible with the wiring diagram used.
Failure to follow these instructions can result in death or serious injury.

CCFG	❑ **[Customized macro]**		
	Read-only parameter, only visible if at least one macro configuration parameter has been modified.		
YES	☐ **[Yes]** (YES)		

Buy: www.ValinOnline.com | Phone 844-385-3099 | Email: CustomerService@valin.com

Code	Name/Description	Adjustment range	Factory setting
bFr 50 60	❑ **[Standard mot. freq]** ☐ **[50Hz IEC]** (50): IEC ☐ **[60Hz NEMA]** (60): NEMA This parameter modifies the presets of the following parameters:[Rated motor volt.] (UnS) below, [High speed] (HSP) page 40, [Freq. threshold] (Ftd) page 62, [Rated motor freq.] (FrS) and [Max frequency] (tFr) .		[60Hz Nema] (50 IEC)
IPL nO YES	❑ **[Input phase loss]** ☐ **[Ignore]** (nO): Fault ignored, to be used when the drive is supplied via a single-phase supply or by the DC bus. ☐ **[Freewheel]** (YES): Fault, with freewheel stop. If one phase disappears, the drive switches to fault mode [Input phase loss] (IPL), but if 2 or 3 phases disappear, the drive continues to operate until it trips on an undervoltage fault. This parameter is only accessible in this menu on MT2P5037M3 to MT201075M3 drives (used with a single phase supply).		According to drive rating
nPr	❑ **[Rated motor power]** Rated motor power given on the nameplate, in kW if [Standard mot. freq] (bFr) = [50Hz IEC] (50), in HP if [Standard mot. freq] (bFr) = [60Hz NEMA] (60).	According to drive rating	According to drive rating
UnS	❑ **[Rated motor volt.]** Rated motor voltage given on the nameplate. MT Series●●● : 100 to 240 V MT Series●●● : 200 to 480 V	According to drive rating	According to drive rating and [Standard mot. freq] (bFr)
nCr	❑ **[Rated mot. current]** Rated motor current given on the nameplate.	0.25 to 1.5 In (1)	According to drive rating and [Standard mot. freq] (bFr)
FrS	❑ **[Rated motor freq.]** Rated motor frequency given on the nameplate. The factory setting is 60 Hz, or preset to 50 Hz if [Standard mot. freq] (bFr) is set to 50 Hz.	10 to 600 Hz	60 Hz
nSP	❑ **[Rated motor speed]** Rated motor speed given on the nameplate. 0 to 9999 rpm then 10.00 to 60.00 krpm on the integrated display terminal. If, rather than the rated speed, the nameplate indicates the synchronous speed and the slip in Hz or as a %, calculate the rated speed as follows: • Nominal speed = Synchronous speed x $\frac{100 - \text{slip as a \%}}{100}$ or • Nominal speed = Synchronous speed x $\frac{50 - \text{slip in Hz}}{50}$ (50 Hz motors) or • Nominal speed = Synchronous speed x $\frac{60 - \text{slip in Hz}}{60}$ (60 Hz motors)	0 to 60000 RPM	According to drive rating
tFr	❑ **[Max frequency]** The factory setting is 72 Hz, or preset to 60 Hz if [Standard mot. freq] (bFr) is set to 50 Hz. The maximum value is limited by the following conditions: • It must not exceed 10 times the value of [Rated motor freq.] (FrS) • It must not exceed 500 Hz if the drive rating is higher than MT2P5037M3 (values between 500 Hz and 1600 Hz are only possible for powers limited to 37 kW (50 HP).	10 to 1600 Hz	72 Hz

(1) In corresponds to the rated drive current indicated in the Installation Manual and on the drive nameplate.

Buy: www.ValinOnline.com | Phone 844-385-3099 | Email: CustomerService@valin.com

Code	Name/Description	Factory setting
tUn nO YES dOnE	❑ **[Auto tuning]** ☐ **[No]** (nO): Auto-tuning not performed. ☐ **[Yes]** (YES): Auto-tuning is performed as soon as possible, then the parameter automatically changes to [Done] (dOnE). ☐ **[Done]** (dOnE): Use of the values given the last time auto-tuning was performed. **Caution:** • It is essential that all motor parameters ([Rated motor volt.] (UnS), [Rated motor freq.] (FrS), [Rated mot. current] (nCr), [Rated motor speed] (nSP), [Rated motor power] (nPr)) are configured correctly before starting auto-tuning. If at least one of these parameters is modified after auto-tuning has been performed, [Auto tuning] (tUn) will return to [No] (nO) and must be repeated. • Auto-tuning is only performed if no stop command has been activated. If a "freewheel stop" or "fast stop" function has been assigned to a logic input, this input must be set to 1 (active at 0). • Auto-tuning takes priority over any run or prefluxing commands, which will be taken into account after the auto-tuning sequence. • If auto-tuning fails, the drive displays [No] (nO) and, depending on the configuration of [Autotune fault mgt] (tnL) page 228, may switch to [Auto-tuning] (tnF) fault mode. • Auto-tuning may last for 1 to 2 seconds. Do not interrupt the process. Wait for the display to change to "[Done] (dOnE)" or "[No] (nO)". ☞ **Note:** During auto-tuning the motor operates at rated current.	[No] (nO)
tUS tAb PEnd PrOG FAIL dOnE	❑ **[Auto tuning status]** (for information only, cannot be modified) ☐ **[Not done]** (tAb): The default stator resistance value is used to control the motor. ☐ **[Pending]** (PEnd): Auto-tuning has been requested but not yet performed. ☐ **[In Progress]** (PrOG): Auto-tuning in progress. ☐ **[Failed]** (FAIL): Auto-tuning has failed. ☐ **[Done]** (dOnE): The stator resistance measured by the auto-tuning function is used to control the motor.	[Not done] (tAb)
PHr AbC ACb	❑ **[Output Ph rotation]** ☐ **[ABC]** (AbC): Forward ☐ **[ACB]** (ACb): Reverse This parameter can be used to reverse the direction of rotation of the motor without reversing the wiring.	[ABC] (AbC)

Buy: www.ValinOnline.com | Phone 844-385-3099 | Email: CustomerService@valin.com

Parameters that can be changed during operation or when stopped

Code	Name/Description		Factory setting
ItH	❑ **[Mot. therm. current]**	0.2 to 1.5 In (1)	According to drive rating
	Motor thermal protection current, to be set to the rated current indicated on the nameplate.		
ACC	❑ **[Acceleration]**	0.1 to 999.9 s	3.0 s
	Time to accelerate from 0 to the [Rated motor freq.] (FrS) (page 38). Make sure that this value is compatible with the inertia being driven.		
dEC	❑ **[Deceleration]**	0.1 to 999.9 s	3.0 s
	Time to decelerate from the [Rated motor freq.] (FrS) (page 38) to 0. Make sure that this value is compatible with the inertia being driven.		
LSP	❑ **[Low speed]**		0
	Motor frequency at minimum reference, can be set between 0 and [High speed] (HSP).		
HSP	❑ **[High speed]**		60 Hz
	Motor frequency at maximum reference, can be set between [Low speed] (LSP) and [Max frequency] (tFr). The factory setting changes to 50 Hz if [Standard mot. freq] (bFr) = [50 IEC NEMA] (50).		

(1) In corresponds to the rated drive current indicated in the Installation Manual and on the drive nameplate.

Buy: www.ValinOnline.com | Phone 844-385-3099 | Email: CustomerService@valin.com

[1.2 MONITORING] (SUP-)

Using graphic display keypad:

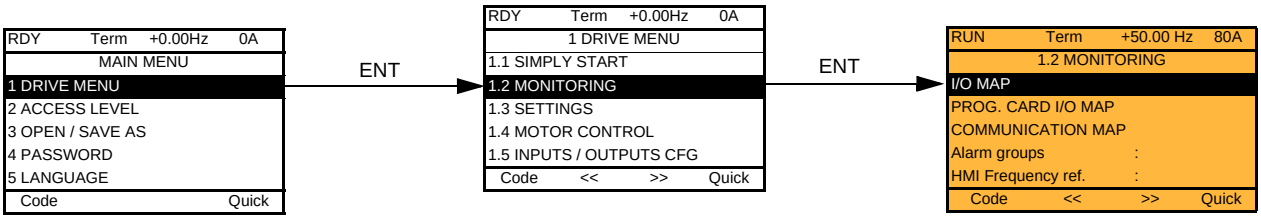

Using integrated display keypad:

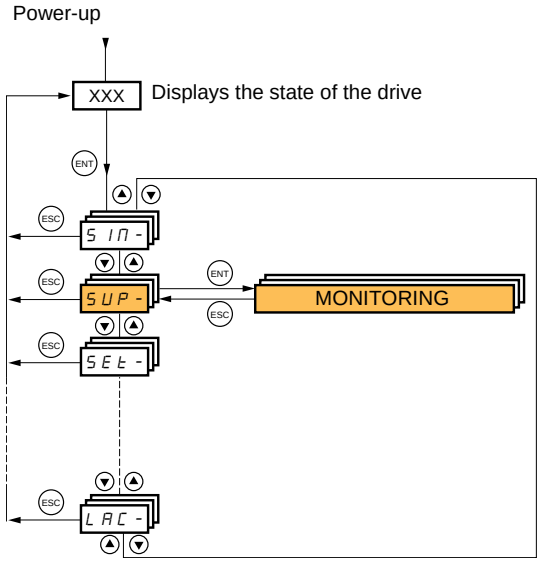

Buy: www.ValinOnline.com | Phone 844-385-3099 | Email: CustomerService@valin.com

Using graphic display keypad

This menu can be used to display the inputs/outputs, the drive internal states and values, and the communication data and values.

```
RUN        Term      +50.00Hz   80A
        1.2 MONITORING
I/O MAP
PROG. CARD I/O MAP
COMMUNICATION MAP
Alarm groups:
HMI Frequency ref.:
Code        <<        >>        Quick
```

- I/O MAP → I/O
- PROG. CARD I/O MAP → I/O of the Controller Inside card if it is present
- COMMUNICATION MAP → Communication data and values
- Alarm groups: / HMI Frequency ref.: → Drive internal drive states and values (see page 46)

I/O

```
RUN        Term      +50.00Hz   80A
        I/O MAP
LOGIC INPUT MAP
ANALOG INPUTS IMAGE
LOGIC OUTPUT MAP
ANALOG OUTPUTS IMAGE
FREQ. SIGNAL IMAGE
Code                           Quick
```

Move from one screen to another (from LOGIC INPUT MAP to FREQ. SIGNAL IMAGE) by turning the navigation button

State 0
State 1

```
RUN        Term      +50.00Hz   80A
        LOGIC INPUT MAP
   PR  LI1  LI2  LI3  LI4  LI5  LI6  LI7
1
0
   LI8  LI9  LI10 LI11 LI12 LI13 LI14
1
0
           <<        >>        Quick
```

Access to the selected input or output configuration: Press ENT.

```
RUN        Term      +50.00Hz   80A
        LI1 assignment
Forward
Pre Fluxing
LI1 On Delay      :          0 ms
           <<        >>        Quick
```

```
RUN        Term      +50.00Hz   80A
        ANALOG INPUTS IMAGE
AI1               :       9.87 V
AI2               :       2.35 mA
Code       <<        >>        Quick
```

ENT →

```
RUN        Term      +50.00Hz   80A
        AI1 assignment
Ref.1 channel
Forced local
Torque reference
AI1 min value :                0.0 V
AI1 max value :               10.0 V
                               Quick
```

State 0
State 1

```
RUN        Term      +50.00Hz   80A
        LOGIC OUTPUT MAP
   R1        R2        LO
LOA:        0000000000000010b
           <<        >>        Quick
```

ENT →

```
RUN        Term      +50.00Hz   80A
        LO1 assignment
No
LO1 delay time    :          0 ms
LO1 active at     :          1
LO1 holding time  :          0 ms
           <<        >>        Quick
```

```
RUN        Term      +50.00Hz   80A
        ANALOG OUTPUTS IMAGE
AO1               :       9.87 V
Code       <<        >>        Quick
```

ENT →

```
RUN        Term      +50.00Hz   80A
        AO1 assignment
Motor freq.
AO1 min output    :          4 mA
AO1 max output    :         20 mA
AO1 Filter        :         10 ms
                               Quick
```

```
RUN        Term      +50.00Hz   80A
        FREQ. SIGNAL IMAGE
RP input  :             25.45 kHz
Encoder   :               225 kHz
Code       <<        >>        Quick
```

ENT →

```
RUN        Term      +50.00Hz   80A
        RP assignment
Frequency ref.
RP min value      :          2 kHz
RP max value      :         50 kHz
RP filter         :          0 ms
                               Quick
```


Buy: www.ValinOnline.com | Phone 844-385-3099 | Email: CustomerService@valin.com

Using graphic display keypad

Communication

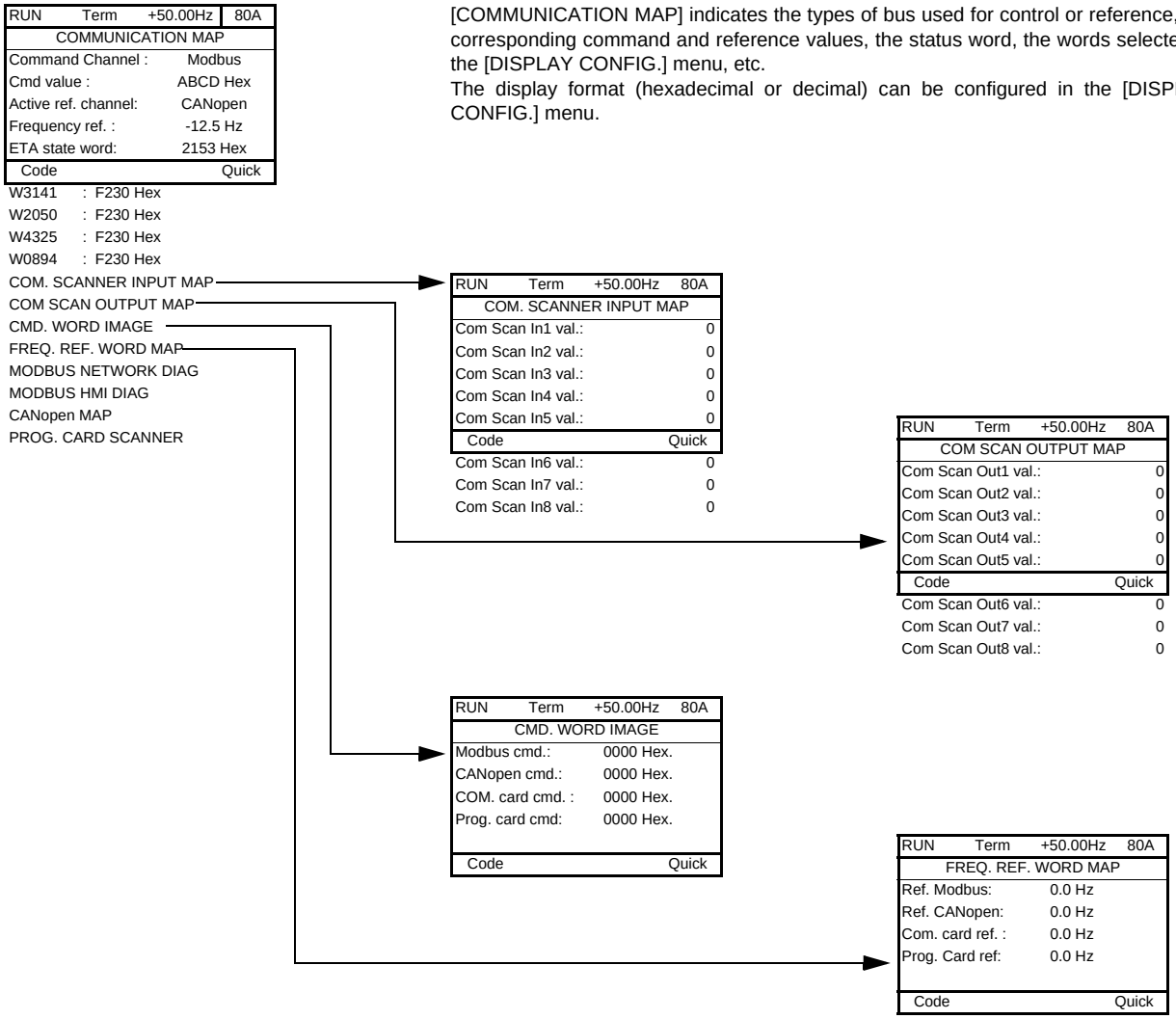

[COMMUNICATION MAP] indicates the types of bus used for control or reference, the corresponding command and reference values, the status word, the words selected in the [DISPLAY CONFIG.] menu, etc.
The display format (hexadecimal or decimal) can be configured in the [DISPLAY CONFIG.] menu.

[COM. SCANNER INPUT MAP] and [COM SCAN OUTPUT MAP]:
Visualization of registers exchanged periodically (8 input and 8 output) for integrated Modbus and for fieldbus cards.

Buy: www.ValinOnline.com | Phone 844-385-3099 | Email: CustomerService@valin.com

Using graphic display keypad

Communication (continued)

The state of the LEDs, the periodic data, the address, the speed, and the format, etc,. is given for each bus.

⊗ LED off
⊗ LED on

RUN	Term	+50.00Hz	80A
COMMUNICATION MAP			
Command Channel :		Modbus	
Cmd value :		ABCD Hex	
Active ref. channel:		CANopen	
Frequency ref. :		-12.5 Hz	
ETA state word:		2153 Hex	
Code			Quick

W3141 : F230 Hex
W2050 : F230 Hex
W4325 : F230 Hex
W0894 : F230 Hex
COM. SCANNER INPUT MAP
COM SCAN OUTPUT MAP
CMD. WORD IMAGE
FREQ. REF. WORD MAP
MODBUS NETWORK DIAG
MODBUS HMI DIAG
CANopen MAP

Communication via Modbus

RUN	Term	+50.00Hz	80A
MODBUS NETWORK DIAG			
COM LED :			⊗
Mb NET frames nb.			
Mb NET CRC errors			
Code			Quick

Communication via the graphic display keypad

RUN	Term	+50.00Hz	80A
MODBUS HMI DIAG			
COM LED :			⊗
Mb HMI frames nb.			
Mb HMI CRC errors			
Code			Quick

Communication via CANopen

RUN	Term	+50.00Hz	80A
CANopen MAP			
RUN LED:			⊗
ERR LED:			⊗
PDO1 IMAGE			
PDO2 IMAGE			
PDO3 IMAGE			
Code			Quick

Canopen NMT state	
Number of TX PDO	0
Number of RX PDO	0
Error code	0
RX Error Counter	0
TX Error Counter	0

PDO images are only visible if CANopen has been enabled (address other than OFF) and if the PDOs are active.

PDO configuration using the network tool.
Some PDOs cannot be used.

RUN	Term	+50.00Hz	80A
PDO1 IMAGE			
Received PDO1-1 :			FDBA Hex
Received PDO1-2			
Received PDO1-3			
Received PDO1-4			
Transmit PDO1-1 :			FDBA Hex
Code			Quick

Transmit PDO1-2
Transmit PDO1-3
Transmit PDO1-4

RUN	Term	+50.00Hz	80A
PDO2 IMAGE			
Received PDO2-1 :			FDBA Hex
Received PDO2-2			
Received PDO2-3			
Received PDO2-4			
Transmit PDO2-1 :			FDBA Hex
Code			Quick

Transmit PDO2-2
Transmit PDO2-3
Transmit PDO2-4

RUN	Term	+50.00Hz	80A
PDO3 IMAGE			
Received PDO3-1 :			FDBA Hex
Received PDO3-2			
Received PDO3-3			
Received PDO3-4			
Transmit PDO3-1 :			FDBA Hex
Code			Quick

Transmit PDO3-2
Transmit PDO3-3
Transmit PDO3-4

Buy: www.ValinOnline.com | Phone 844-385-3099 | Email: CustomerService@valin.com

Using graphic display keypad

Communication (continued)

RUN	Term	+50.00Hz	80A
COMMUNICATION MAP			
Command Channel :		Modbus	
Cmd value :		ABCD Hex	
Active ref. channel:		CANopen	
Frequency ref. :		-12.5 Hz	
ETA state word:		2153 Hex	
Code			Quick

W3141 : F230 Hex
W2050 : F230 Hex
W4325 : F230 Hex
W0894 : F230 Hex
COM. SCANNER INPUT MAP
COM SCAN OUTPUT MAP
CMD. WORD IMAGE
FREQ. REF. WORD MAP
MODBUS NETWORK DIAG
MODBUS HMI DIAG
CANopen MAP

[Input scanner] and [Output scanner]:
Visualization of registers exchanged periodically (8 input and 8 output).

Buy: www.ValinOnline.com | Phone 844-385-3099 | Email: CustomerService@valin.com

Using graphic display keypad: Drive-internal states and values

Name/Description	
[Alarm groups] (ALGr)	Current alarm group numbers
[HMI Frequency ref.] (LFr)	in Hz. Frequency reference via the graphic display keypad (can be accessed if the function has been configured).
[Internal PID ref.] (rPI)	as a process value. PID reference via graphic display keypad (can be accessed if the function has been configured).
[HMI torque ref.] (Ltr)	as a % of the rated torque. Torque reference via graphic display keypad.
[Multiplying coeff.] (MFr)	as a % (can be accessed if [Multiplier ref. -] (MA2,MA3) page 130 has been assigned)
[Frequency ref.] (FrH)	in Hz
[Torque reference] (trr)	as a % of the rated torque (can be accessed if the function has been configured)
[Output frequency] (rFr)	in Hz
[Measured output fr.] (MMF)	in Hz: The measured motor speed is displayed if an encoder card has been inserted and configured in speed feedback mode, otherwise 0 appears.
[Pulse in. work. freq.] (FqS)	in Hz: Frequency of the "Pulse input" input used by the [FREQUENCY METER] (FqF-) function, page 225.
[Motor current] (LCr)	in A
[ENA avg speed] (AUS)	in Hz: The parameter can be accessed if [ENA system] (EnA) = [Yes] (YES) (see page 75)
[Motor speed] (SPd)	in rpm
[Motor voltage] (UOP)	in V
[Motor power] (OPr)	as a % of the rated power
[Motor torque] (Otr)	as a % of the rated torque
[Mains voltage] (ULn)	in V. Line voltage from the point of view of the DC bus, motor running or stopped.
[Motor thermal state] (tHr)	as a %
[Drv.thermal state] (tHd)	as a %
[DBR thermal state] (tHb)	as a % (can only be accessed on high rating drives)
[Consumption] (APH)	in Wh, kWh or MWh (accumulated consumption)
[Run time] (rtH)	in seconds, minutes or hours (length of time the motor has been switched on)
[Power on time] (PtH)	in seconds, minutes or hours (length of time the drive has been switched on)
[IGBT alarm counter] (tAC)	in seconds (length of time the "IGBT temperature" alarm has been active)
[PID reference] (rPC)	as a process value (can be accessed if the PID function has been configured)
[PID feedback] (rPF)	as a process value (can be accessed if the PID function has been configured)
[PID error] (rPE)	as a process value (can be accessed if the PID function has been configured)
[PID Output] (rPO)	in Hz (can be accessed if the PID function has been configured)
[Date/Time] (CLO)	Current date and time
[Config. active] (CnFS)	Active configuration [Config. n°0, 1 or 2]
[Utilised param. set] (CFPS)	[Set n°1, 2 or 3] (can be accessed if parameter switching has been enabled, see page 192)
[ALARMS] (ALr-)	List of current alarms. If an alarm is present, a ✓ appears.
[OTHER STATE] (SSt-)	List of secondary states:

- [In motor fluxing] (FLX): In motor fluxing
- [PTC1 alarm] (PtC1): Probe alarm 1
- [PTC2 alarm] (PtC2): Probe alarm 2
- [LI6=PTC alarm] (PtC3): LI6 = PTC probe alarm
- [Fast stop in prog.] (FSt): Fast stop in progress
- [Current Th. attained] (CtA): Current threshold attained ([Current threshold] (Ctd) page 61)
- [Freq. Th. attained] (FtA): Frequency threshold attained ([Freq. threshold] (Ftd) page 62)
- [Freq. Th. 2 attained] (F2A): 2nd frequency threshold attained ([Freq. threshold 2] (F2d) page 62)
- [Frequency ref. att.] (SrA): Frequency reference attained
- [Motor th. state att.] (tSA): Motor 1 thermal state attained
- [External fault alarm] (EtF): External fault alarm
- [Auto restart] (AUtO): Automatic restart in progress
- [Remote] (FtL) : Line mode control
- [Auto-tuning] (tUn): Performing auto-tuning
- [Undervoltage] (USA): Undervoltage alarm
- [Cnfg.1 act.] (CnF1): Configuration 1 active
- [Cnfg.2 act.] (CnF2): Configuration 2 active
- [HSP attained] (FLA): High speed attained
- [Load slipping] (AnA): Slipping alarm
- [Set 1 active] (CFP1): Parameter set 1 active
- [Set 2 active] (CFP2): Parameter set 2 active
- [Set 3 active] (CFP3): Parameter set 3 active
- [In braking] (brS): Drive braking
- [DC bus loading] (dbL): DC bus loading
- [Forward] (MFrd): Motor running forward
- [Reverse] (MrrS): Motor running in reverse
- [High torque alarm] (ttHA): Motor torque overshooting high threshold [High torque thd.] (ttH) page 61.
- [Low torque alarm] (ttLA): Motor torque undershooting low threshold [Low torque thd.] (ttL) page 61.
- [Freq. meter Alarm] (FqLA): Measured speed threshold attained: [Pulse warning thd.] (FqL) page 62.

Buy: www.ValinOnline.com | Phone 844-385-3099 | Email: CustomerService@valin.com

Using integrated display keypad

This menu can be used to display the drive inputs, states and internal values.

Code	Name/Description	Adjustment range	Factory setting
IOM-	**I/O MAP**		
LIA-	**Logic input functions**		
LIA to LI4A	Can be used to display the functions assigned to each input. If no functions have been assigned, nO is displayed. Use the ▲ and ▼ arrows to scroll through the functions. If a number of functions have been assigned to the same input, check that they are compatible.		
LIS1	**State of logic inputs LI1 to LI8**		
	Can be used to visualize the state of logic inputs LI1 to LI8 (display segment assignment: high = 1, low = 0) 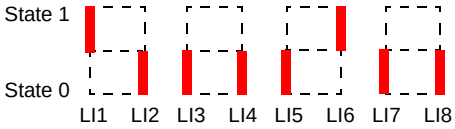 Example above: LI1 and LI6 are at 1; LI2 to LI5, LI7 and LI8 are at 0.		
LIS2	**State of logic inputs LI9 to LI14 and Power Removal**		
	Can be used to visualize the state of logic inputs LI9 to LI14 and PR (Power Removal) (display segment assignment: high = 1, low = 0) 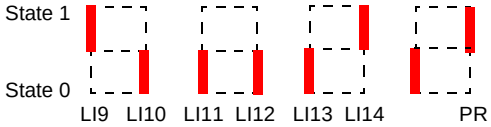 Example above: LI9 and LI14 are at 1, LI10 to LI13 are at 0 and PR (Power Removal) is at 1.		
AIA-	**Analog input functions**		
AI1A AI2A AI3A AI4A	Can be used to display the functions assigned to each input. If no functions have been assigned, nO is displayed. Use the ▲ and ▼ arrows to scroll through the functions. If a number of functions have been assigned to the same input, check that they are compatible.		

Buy: www.ValinOnline.com | Phone 844-385-3099 | Email: CustomerService@valin.com

Using integrated display keypad: Drive-internal states and values

Code	Name/Description	Unit
ALGr	**Alarm groups:** Current alarm group numbers	
rPI	**Internal PID reference:** PID reference via graphic display keypad (can be accessed if the function has been configured).	as a process value
MFr	**Multiplication coefficient** (can be accessed if [Multiplier ref. -] (MA2,MA3) page 130 has been assigned)	%
FrH	**Frequency ref.**	Hz
trr	**Torque reference:** Can be accessed if the function has been configured	%.
rFr	**Output frequency**	Hz
MMF	**The measured motor speed is displayed** if an encoder card has been inserted and configured in speed feedback mode, otherwise 0 appears.	Hz
F9S	**Frequency of the "Pulse input" input** used by the [FREQUENCY METER] (FqF-) function, page 225.	Hz
LCr	**Motor current**	A
AUS	**ENA avg SPEED:** The parameter can be accessed if EnA = YES (see page 75)	Hz
SPd	**Motor speed**	rpm
UOP	**Motor voltage**	V
OPr	**Motor power**	%
Otr	**Motor torque**	%
ULn	**Line voltage:** Line voltage from the point of view of the DC bus, motor running or stopped.	V
tHr	**Motor thermal state**	%
tHd	**Drv thermal state**	%
tHb	**DBR thermal state:** Can be accessed on high rating drives only.	%
APH	**Power consumption**	Wh, kWh or MWh
rtH	**Run time:** Length of time the motor has been turned on	seconds, minutes or hours
PtH	**Power on time:** Length of time the drive has been turned on	
tAC	**IGBT alarm counter:** Length of time the "IGBT temperature" alarm has been active	seconds
rPC	**PID reference:** Can be accessed if the PID function has been configured	as a process value
rPF	**PID feedback:** Can be accessed if the PID function has been configured	
rPE	**PID error:** Can be accessed if the PID function has been configured	
rPO	**PID Output:** Can be accessed if the PID function has been configured	Hz
CnFS	**Config. active:** CnF0, 1 or 2 (can be accessed if motor or configuration switching has been enabled, see page 196)	
CFPS	**Utilised param. set:** CFP1, 2 or 3 (can be accessed if parameter switching has been enabled, see page 192)	

Buy: www.ValinOnline.com | Phone 844-385-3099 | Email: CustomerService@valin.com

[1.3 SETTINGS] (SEt-)

With graphic display keypad:

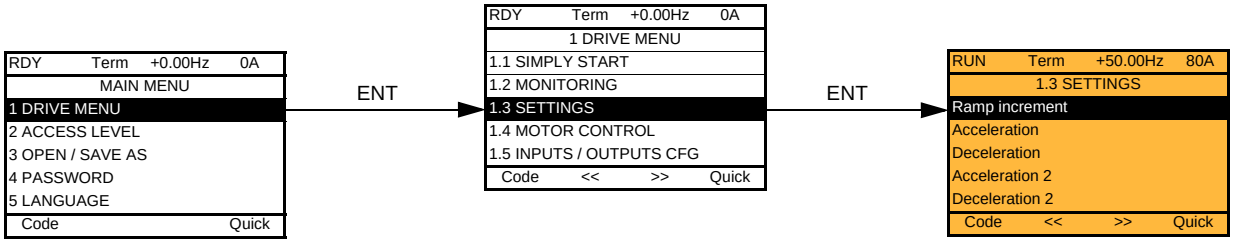

With integrated display keypad:

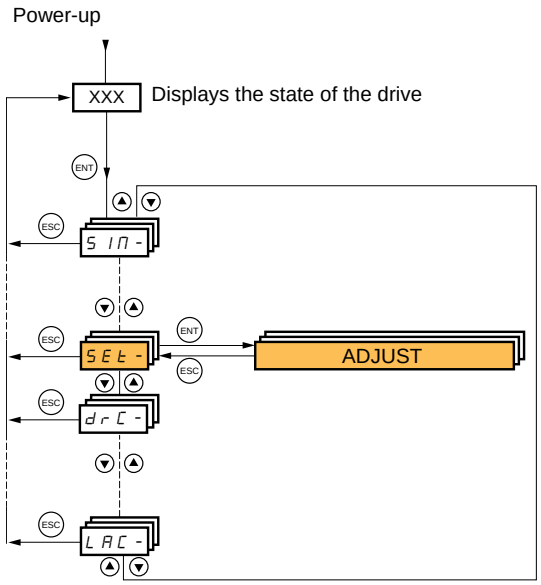

Buy: www.ValinOnline.com | Phone 844-385-3099 | Email: CustomerService@valin.com

The adjustment parameters can be modified with the drive running or stopped.

⚠ DANGER

UNINTENDED EQUIPMENT OPERATION

- Check that changes made to the settings during operation do not present any danger.
- We recommend stopping the drive before making any changes.

Failure to follow these instructions will result in death or serious injury.

Code	Name/Description	Adjustment range	Factory setting
Inr 0.01 0.1 1	❑ **[Ramp increment]** ☐ **[0,01]**: ramp up to 99.99 seconds ☐ **[0,1]**: ramp up to 999.9 seconds ☐ **[1]**: ramp up to 6000 seconds This parameter is valid for [Acceleration] (ACC), [Deceleration] (dEC), [Acceleration 2] (AC2) and [Deceleration 2] (dE2).	0,01 - 0,1 - 1	0,1
ACC	❑ **[Acceleration]** Time to accelerate from 0 to the [Rated motor freq.] (FrS) (page 64). Make sure that this value is compatible with the inertia being driven.	0.01 to 6000 s (1)	3.0 s
dEC	❑ **[Deceleration]** Time to decelerate from the [Rated motor freq.] (FrS) (page 64) to 0. Make sure that this value is compatible with the inertia being driven.	0.01 to 6000 s (1)	3.0 s
AC2 ★	❑ **[Acceleration 2]** See page 133 Time to accelerate from 0 to the [Rated motor freq.] (FrS). Make sure that this value is compatible with the inertia being driven.	0.01 to 6000 s (1)	5.0 s
dE2 ★	❑ **[Deceleration 2]** See page 133 Time to decelerate from the [Rated motor freq.] (FrS) to 0. Make sure that this value is compatible with the inertia being driven.	0.01 to 6000 s (1)	5.0 s
tA1 ★	❑ **[Begin Acc round]** See page 132 Rounding of start of acceleration ramp as a % of the [Acceleration] (ACC) or [Acceleration 2] (AC2) ramp time.	0 to 100%	10%
tA2 ★	❑ **[End Acc round]** See page 132 - Rounding of end of acceleration ramp as a % of the [Acceleration] (ACC) or [Acceleration 2] (AC2) ramp time. - Can be set between 0 and (100% - [Begin Acc round] (tA1))		10%
tA3 ★	❑ **Begin Dec round]** See page 132 Rounding of start of deceleration ramp as a % of the [Deceleration] (dEC) or [Deceleration 2] (dE2) ramp time.	0 to 100%	10%

(1) Range 0.01 to 99.99 s or 0.1 to 999.9 s or 1 to 6000 s according to [Ramp increment] (Inr).

★ These parameters only appear if the corresponding function has been selected in another menu. When the parameters can also be accessed and adjusted from within the configuration menu for the corresponding function, their description is detailed in these menus, on the pages indicated, to aid programming.

Buy: www.ValinOnline.com | Phone 844-385-3099 | Email: CustomerService@valin.com

Code	Name/Description	Adjustment range	Factory setting
tA4 ★	❑ **[End Dec round]** See page 132 - Rounding of end of deceleration ramp as a % of the [Deceleration] (dEC) or [Deceleration 2] (dE2) ramp time. - Can be set between 0 and (100% - [Begin Dec round] (tA3))		10%
LSP	❑ **[Low speed]** Motor frequency at minimum reference, can be set between 0 and [High speed] (HSP).		0 Hz
HSP	❑ **[High speed]** Motor frequency at maximum reference, can be set between [Low speed] (LSP) and [Max frequency] (tFr).		60 Hz
ItH	❑ **[Mot. therm. current]** Motor thermal protection current, to be set to the rated current indicated on the nameplate.	0.2 to 1.5 In (1)	According to drive rating
SPG	❑ **[Speed prop. gain]** Speed loop proportional gain	0 to 1000%	40%
SIt	❑ **[Speed time integral]** Speed loop integral time constant.	1 to 1000%	100%
SFC	❑ **[K speed loop filter]** Speed loop filter coefficient.	0 to 100	0

(1) In corresponds to the rated drive current indicated in the Installation Manual or on the drive nameplate.

Buy: www.ValinOnline.com | Phone 844-385-3099 | Email: CustomerService@valin.com

Parameter settings for [K speed loop filter] (SFC), [Speed prop. gain] (SPG) and [Speed time integral] (SIt)

- The following parameters can only be accessed in vector control profiles: [Motor control type] (Ctt) page 66 = [SVC V] (UUC), [SVC I] (CUC), [FVC] (FUC) and [Sync. mot.] (SYn) and if [ENA system] (EnA) page 75 = [No] (nO).
- The factory settings are suitable for most applications.

General case: Setting for [K speed loop filter] (SFC) = 0

The regulator is an "IP" type with filtering of the speed reference, for applications requiring flexibility and stability (hoisting or high inertia, for example).

- [Speed prop. gain] (SPG) affects excessive speed.
- [Speed time integral] (SIt) affects the bandwidth and response time.

Initial response

Reference division

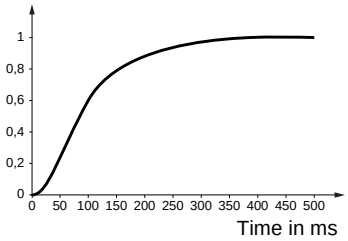

Reduction in SIT ↘

Reference division

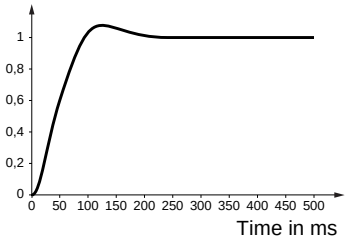

Reduction in SIT ↘↘

Reference division

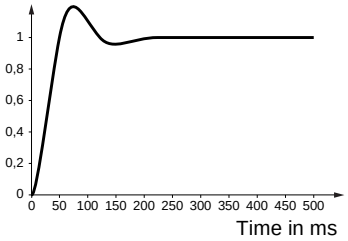

Initial response

Reference division

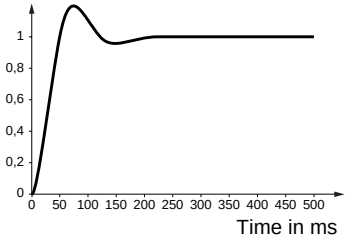

Increase in SPG ↗

Reference division

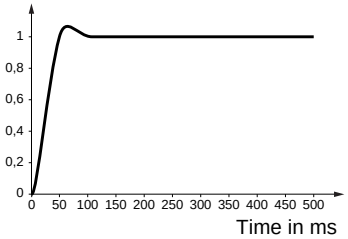

Increase in SPG ↗↗

Reference division

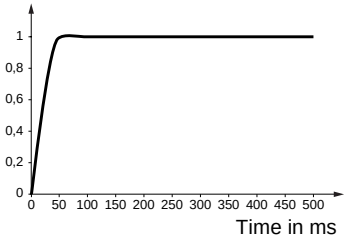

Buy: www.ValinOnline.com | Phone 844-385-3099 | Email: CustomerService@valin.com

Special case: Parameter [K speed loop filter] (SFC) not 0

This parameter must be reserved for specific applications that require a short response time (trajectory positioning or servo control).

- When set to 100 as described above the regulator is a “PI” type, without filtering of the speed reference.
- Settings between 0 and 100 will obtain an intermediate function between the settings below and those on the previous page.

Example: Setting for [K speed loop filter] (SFC) = 100

- [Speed prop. gain] (SPG) affects the bandwidth and response time.
- [Speed time integral] (SIt) affects excessive speed.

Initial response

Reference division

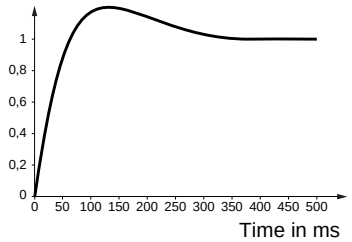

Reduction in SIT ↘

Reference division

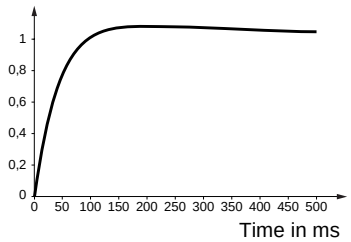

Reduction in SIT ↘↘

Reference division

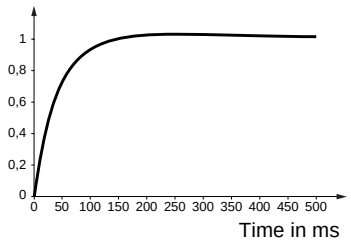

Initial response

Reference division

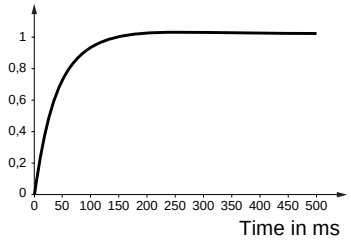

Increase in SPG ↗

Reference division

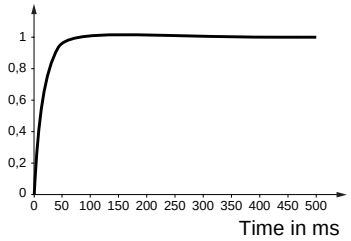

Increase in SPG ↗↗

Reference division

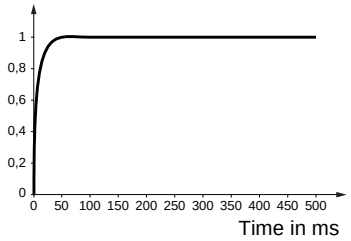

Buy: www.ValinOnline.com | Phone 844-385-3099 | Email: CustomerService@valin.com

Code	Name/Description	Adjustment range	Factory setting
GPE ★	❑ **[ENA prop.gain]** See page 75	1 to 9999	250
GIE ★	❑ **[ENA integral gain]** See page 75	0 to 9999	100
UFr ★	❑ **[IR compensation]** See page 69	25 to 200%	100%
SLP ★	❑ **[Slip compensation]** See page 69	0 to 300%	100%
dCF ★	❑ **[Ramp divider]** See page 134	0 to 10	4
IdC ★	❑ **[DC inject. level 1]** See page 135 Level of DC injection braking current activated via logic input or selected as stop mode. **CAUTION** Check that the motor will withstand this current without overheating. **Failure to follow this instruction can result in equipment damage.**	0.1 to 1.41 In (1)	0.64 In (1)
tdI ★	❑ **[DC injection time 1]** See page 135 Maximum current injection time [DC inject. level 1] (IdC). After this time the injection current becomes [DC inject. level 2] (IdC2).	0.1 to 30 s	0.5 s
IdC2 ★	❑ **[DC inject. level 2]** See page 135 Injection current activated by logic input or selected as stop mode, once period of time [DC injection time 1] (tdI) has elapsed. **CAUTION** Check that the motor will withstand this current without overheating. **Failure to follow this instruction can result in equipment damage.**	0.1 In (2) to [DC inject. level 1] (IdC)	0.5 In (1)
tdC ★	❑ **[DC injection time 2]** See page 135 Maximum injection time [DC inject. level 2] (IdC2) for injection selected as stop mode only.	0.1 to 30 s	0.5 s

(1) In corresponds to the rated drive current indicated in the Installation Manual or on the drive nameplate.

★ These parameters only appear if the corresponding function has been selected in another menu. When the parameters can also be accessed and adjusted from within the configuration menu for the corresponding function, their description is detailed in these menus, on the pages indicated, to aid programming.

Buy: www.ValinOnline.com | Phone 844-385-3099 | Email: CustomerService@valin.com

Code	Name/Description	Adjustment range	Factory setting
SdC1 ★	❑ **[Auto DC inj. level 1]** Level of standstill DC injection current. This parameter can be accessed if [Auto DC injection] (AdC) page 136 is not [No] (nO) This parameter is forced to 0 if [Motor control type] (Ctt) page 66 = [Sync. mot.] (SYn). **CAUTION** Check that the motor will withstand this current without overheating. **Failure to follow this instruction can result in equipment damage.**	0 to 1.2 In (1)	0.7 In (1)
tdC1 ★	❑ **[Auto DC inj. time 1]** Standstill injection time. This parameter can be accessed if [Auto DC injection] (AdC) page 136 is not [No] (nO) If [Motor control type] (Ctt) page 66 = [FVC] (FUC) or [Sync. mot.] (SYn) this time corresponds to the zero speed maintenance time.	0.1 to 30 s	0.5 s
SdC2 ★	❑ **[Auto DC inj. level 2]** 2nd level of standstill DC injection current. This parameter can be accessed if [Auto DC injection] (AdC) page 136 is not [No] (nO) This parameter is forced to 0 if [Motor control type] (Ctt) page 66 = [Sync. mot.] (SYn). **CAUTION** Check that the motor will withstand this current without overheating. **Failure to follow this instruction can result in equipment damage.**	0 to 1.2 In (1)	0.5 In (1)
tdC2 ★	❑ **[Auto DC inj. time 2]** 2nd standstill injection time. This parameter can be accessed if [Auto DC injection] (AdC) page 136 = [Yes] (YES)	0 to 30 s	0 s

AdC	SdC2	Operation
YES	x	
Ct	≠ 0	
Ct	= 0	
Run command		
Speed		

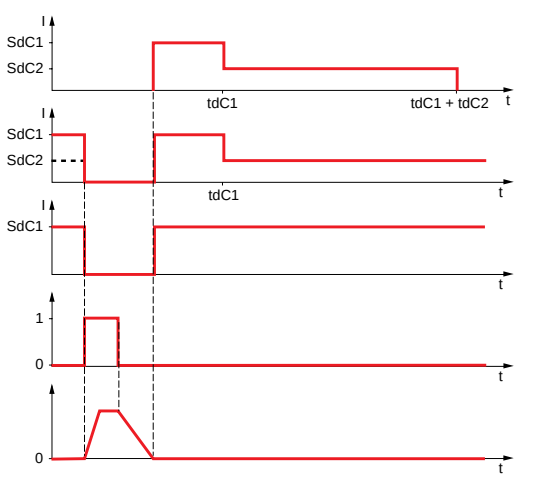

Note: When [Motor control type] (Ctt) page 66 = [FVC] (FUC):
[Auto DC inj. level 1] (SdC1), [Auto DC inj. level 2] (SdC2) and [Auto DC inj. time 2] (tdC2) are not accessible. Only [Auto DC inj. time 1] (tdC1) can be accessed. This then corresponds to a zero speed maintenance time.

(1) In corresponds to the rated drive current indicated in the Installation Manual or on the drive nameplate.

Buy: www.ValinOnline.com | Phone 844-385-3099 | Email: CustomerService@valin.com

Code	Name/Description	Adjustment range	Factory setting
SFr	❑ **[Switching freq.]**	According to rating	According to rating

Switching frequency setting.
Adjustment range: This can vary between 1 and 16 kHz, but the minimum and maximum values, as well as the factory setting, can be limited in accordance with the type of drive (MT Series), the rating and the configuration of the [Sinus filter] (OFI) and [Motor surge limit] (SUL) parameters, page 77.

If the value is less than 2 kHz, [Current Limitation] (CLI) and [I Limit. 2 value] (CL2) page 56 are limited to 1.36 In.
Adjustment with drive running:
- If the initial value is less than 2 kHz, it is not possible to increase it above 1.9 kHz while running.
- If the initial value is greater than or equal to 2 kHz, a minimum of 2 kHz must be maintained while running.
Adjustment with the drive stopped: No restrictions.

☞ **Note:** In the event of excessive temperature rise, the drive will automatically reduce the switching frequency and reset it once the temperature returns to normal.

☞ **Note:** If [Motor control type] (Ctt) page 66 = [FVC] (FUC), we do not recommend setting the switching frequency to a value less than 2 kHz (in order to avoid speed instability).
.

CAUTION

On MT401 to MT405, drives, if the RFI filters are disconnected (operation on an IT system), the drive's switching frequency must not exceed 4 kHz.
Failure to follow this instruction can result in equipment damage.

CLI	❑ **[Current Limitation]**	0 to 1.65 In (1)	1.5 In (1)

Used to limit the motor current.
The adjustment range is limited to 1.36 In if [Switching freq.] (SFr) page 56 is less than 2 kHz.
☞ **Note:** If the setting is less than 0.25 In, the drive may lock in [Output Phase Loss] (OPF) fault mode if this has been enabled (see page 214). If it is less than the no-load motor current, the limitation no longer has any effect.

CL2 ★	❑ **[I Limit. 2 value]**	0 to 1.65 In (1)	1.5 In (1)

See page 181
The adjustment range is limited to 1.36 In if [Switching freq.] (SFr) page 56 is less than 2 kHz.
☞ **Note:** If the setting is less than 0.25 In, the drive may lock in [Output Phase Loss] (OPF) fault mode if this has been enabled (see page 214). If it is less than the no-load motor current, the limitation no longer has any effect.

(1) In corresponds to the rated drive current indicated in the Installation Manual or on the drive nameplate.

★ These parameters only appear if the corresponding function has been selected in another menu. When the parameters can also be accessed and adjusted from within the configuration menu for the corresponding function, their description is detailed in these menus, on the pages indicated, to aid programming.

Buy: www.ValinOnline.com | Phone 844-385-3099 | Email: CustomerService@valin.com

Code	Name/Description	Adjustment range	Factory setting
FLU	❑ **[Motor fluxing]** ☐ **[Not cont.]** (FnC): Non-continuous mode ☐ **[Continuous]** (FCt): Continuous mode. This option is not possible if [Auto DC injection] (AdC) page 136 is [Yes] (YES) or if [Type of stop] (Stt) page 134 is [Freewheel] (nSt). ☐ **[No]** (FnO): Function inactive This option is not possible if [Motor control type] (Ctt) page 66 = [SVCI] (CUC) or [FVC] (FUC). If [Motor control type] (Ctt) page 66 = [SVCI] (CUC), [FVC] (FUC) or [Sync. mot.] (SYn) the factory setting is replaced by [Not cont.] (FnC). In order to obtain rapid high torque on startup, magnetic flux needs to already have been established in the motor. • In [Continuous] (FCt) mode, the drive automatically builds up flux when it is powered up. • In [Not cont.] (FnC) mode, fluxing occurs when the motor starts up. The flux current is greater than nCr (configured rated motor current) when the flux is established and is then adjusted to the motor magnetizing current... **CAUTION** Check that the motor will withstand this current without overheating. **Failure to follow this instruction can result in equipment damage.** If [Motor control type] (Ctt) page 66 = [Sync. mot.] (SYn), the [Motor fluxing] (FLU) parameter causes the alignment of the rotor and not the fluxing. If [Brake assignment] (bLC) page 154 is not [No] (nO), the [Motor fluxing] (FLU) parameter has no effect.		[No] (FnO)
tLS	❑ **[Low speed time out]** Maximum operating time at [Low speed] (LSP) (see page 40) Following operation at LSP for a defined period, a motor stop is requested automatically. The motor will restart if the reference is greater than LSP and if a run command is still present. Caution: A value of 0 indicates an unlimited period of time. ☞ **Note:** If [Low speed time out] (tLS) is not 0, [Type of stop] (Stt) page 134 is forced to [Ramp stop] (rMP) (only if a ramp stop can be configured).	0 to 999.9 s	0 s
JGF ★	❑ **[Jog frequency]** See page 138 Reference in jog operation	0 to 10 Hz	10 Hz
JGt ★	❑ **[Jog delay]** See page 138 Anti-repeat delay between 2 consecutive jog operations.	0 to 2.0 s	0.5 s

(1) In corresponds to the rated drive current indicated in the Installation Manual or on the drive nameplate.

★ These parameters only appear if the corresponding function has been selected in another menu. When the parameters can also be accessed and adjusted from within the configuration menu for the corresponding function, their description is detailed in these menus, on the pages indicated, to aid programming.

Buy: www.ValinOnline.com | Phone 844-385-3099 | Email: CustomerService@valin.com

Code	Name/Description	Adjustment range	Factory setting
SP2 ★	❑ [Preset speed 2] See page 141 Preset speed 2	0 to 1600 Hz	10 Hz
SP3 ★	❑ [Preset speed 3] See page 141 Preset speed 3	0 to 1600 Hz	15 Hz
SP4 ★	❑ [Preset speed 4] See page 141 Preset speed 4	0 to 1600 Hz	20 Hz
SP5 ★	❑ [Preset speed 5] See page 141 Preset speed 5	0 to 1600 Hz	25 Hz
SP6 ★	❑ [Preset speed 6] See page 141 Preset speed 6	0 to 1600 Hz	30 Hz
SP7 ★	❑ [Preset speed 7] See page 141 Preset speed 7	0 to 1600 Hz	35 Hz
SP8 ★	❑ [Preset speed 8] See page 141 Preset speed 8	0 to 1600 Hz	40 Hz
SP9 ★	❑ [Preset speed 9] See page 141 Preset speed 9	0 to 1600 Hz	45 Hz
SP10 ★	❑ [Preset speed 10] See page 141 Preset speed 10	0 to 1600 Hz	50 Hz
SP11 ★	❑ [Preset speed 11] See page 141 Preset speed 11	0 to 1600 Hz	55 Hz
SP12 ★	❑ [Preset speed 12] See page 141 Preset speed 12	0 to 1600 Hz	60 Hz
SP13 ★	❑ [Preset speed 13] See page 141 Preset speed 13	0 to 1600 Hz	70 Hz
SP14 ★	❑ [Preset speed 14] See page 141 Preset speed 14	0 to 1600 Hz	80 Hz

★ These parameters only appear if the corresponding function has been selected in another menu. When the parameters can also be accessed and adjusted from within the configuration menu for the corresponding function, their description is detailed in these menus, on the pages indicated, to aid programming.

Buy: www.ValinOnline.com | Phone 844-385-3099 | Email: CustomerService@valin.com

Code	Name/Description	Adjustment range	Factory setting
SP15 ★	❑ **[Preset speed 15]** See page 141 Preset speed 15	0 to 1600 Hz	90 Hz
SP16 ★	❑ **[Preset speed 16]** See page 141 Preset speed 16	0 to 1600 Hz	100 Hz
MFr	❑ **[Multiplying coeff.]** Multiplying coefficient, can be accessed if [Multiplier ref.-] (MA2,MA3) page 130 has been assigned to the graphic terminal	0 to 100%	100%
SrP ★	❑ **[+/-Speed limitation]** See page 145 Limitation of +/- speed variation	0 to 50%	10%
rPG ★	❑ **[PID prop. gain]** See page 170 Proportional gain	0.01 to 100	1
rIG ★	❑ **[PID integral gain]** See page 171 Integral gain	0.01 to 100	1
rdG ★	❑ **[PID derivative gain]** See page 171 Derivative gain	0.00 to 100	0
PrP ★	❑ **[PID ramp]** See page 171 PID acceleration/deceleration ramp, defined to go from [Min PID reference] (PIP1) to [Max PID reference] (PIP2) and vice versa.	0 to 99.9 s	0
POL ★	❑ **[Min PID output]** See page 171 Minimum value of regulator output in Hz	- 500 to 500 or -1600 to 1600 according to rating	0 Hz
POH ★	❑ **[Max PID output]** See page 171 Maximum value of regulator output in Hz	0 to 500 or 1600 according to rating	60 Hz
PAL ★	❑ **[Min fbk alarm]** See page 171 Minimum monitoring threshold for regulator feedback	See page 171 (1)	100
PAH ★	❑ **[Max fbk alarm]** See page 171 Maximum monitoring threshold for regulator feedback	See page 171 (1)	1000

(1) If a graphic display terminal is not in use, values greater than 9999 will be displayed on the 4-digit display with a period mark after the thousand digit, e.g., 15.65 for 15650.

★ These parameters only appear if the corresponding function has been selected in another menu. When the parameters can also be accessed and adjusted from within the configuration menu for the corresponding function, their description is detailed in these menus, on the pages indicated, to aid programming.

Buy: www.ValinOnline.com | Phone 844-385-3099 | Email: CustomerService@valin.com

Code	Name/Description	Adjustment range	Factory setting
PEr ★	❑ **[PID error Alarm]** See page 171 Regulator error monitoring threshold	0 to 65535 (1)	100
P5r ★	❑ **[Speed input %]** See page 172 Multiplying coefficient for predictive speed input.	1 to 100%	100%
rP2 ★	❑ **[Preset ref. PID 2]** See page 174 Preset PID reference	See page 174 (1)	300
rP3 ★	❑ **[Preset ref. PID 3]** See page 174 Preset PID reference	See page 174 (1)	600
rP4 ★	❑ **[Preset ref. PID 4]** See page 174 Preset PID reference	See page 174 (1)	900
Ibr ★	❑ **[Brake release I FW]** See page 154 Brake release current threshold for lifting or forward movement	0 to 1.32 In (2)	0
Ird ★	❑ **[Brake release I Rev]** See page 154 Brake release current threshold for lowering or reverse movement	0 to 1.32 In (2)	0
brt ★	❑ **[Brake Release time]** See page 155 Brake release time delay	0 to 5.00 s	0 s
blr ★	❑ **[Brake release freq]** See page 155 Brake release frequency threshold	[Auto] (AUtO) 0 to 10 Hz	[Auto] (AUtO)
bEn ★	❑ **[Brake engage freq]** See page 155 Brake engage frequency threshold	[Auto] (AUtO) 0 to 10 Hz	[Auto] (AUtO)
tbE ★	❑ **[Brake engage delay]** See page 155 Time delay before request to engage brake. To delay the engaging of the brake, for horizontal movement only, if you wish the brake to engage when the drive comes to a complete stop.	0 to 5.00 s	0 s

(1) If a graphic display terminal is not in use, values greater than 9999 will be displayed on the 4-digit display with a period mark after the thousand digit, e.g., 15.65 for 15650.
(2) In corresponds to the rated drive current indicated in the Installation Manual or on the drive nameplate.

★ These parameters only appear if the corresponding function has been selected in another menu. When the parameters can also be accessed and adjusted from within the configuration menu for the corresponding function, their description is detailed in these menus, on the pages indicated, to aid programming.

Buy: www.ValinOnline.com | Phone 844-385-3099 | Email: CustomerService@valin.com

Code	Name/Description	Adjustment range	Factory setting
bEt ★	❑ **[Brake engage time]** See page 155 Brake engage time (brake response time)	0 to 5.00 s	0 s
JdC ★	❑ **[Jump at reversal]** See page 156	[Auto] (AUtO) 0 to 10 Hz	[Auto] (AUtO)
ttr ★	❑ **[Time to restart]** See page 156 Time between the end of a brake engage sequence and the start of a brake release sequence	0 to 5.00 s	0 s
tLIM ★	❑ **[Motoring torque lim]** See page 179 Torque limitation in generator mode, as a % or in 0.1% increments of the rated torque in accordance with the [Torque increment] (IntP) parameter, page 179.	0 to 300%	100%
tLIG ★	❑ **[Gen. torque lim]** See page 179 Torque limitation in generator mode, as a % or in 0.1% increments of the rated torque in accordance with the [Torque increment] (IntP) parameter, page 179.	0 to 300%	100%
trH ★	❑ **[Traverse freq. high]** See page 202	0 to 10 Hz	4 Hz
trL ★	❑ **[Traverse freq. low]** See page 202	0 to 10 Hz	4 Hz
qSH ★	❑ **[Quick step High]** See page 202	0 to [Traverse freq. high] (trH)	0 Hz
qSL ★	❑ **[Quick step Low]** See page 202	0 to [Traverse freq. low] (trL)	0 Hz
Ctd	❑ **[Current threshold]** Current threshold for [I attained] (CtA) function assigned to a relay or a logic output (see page 97).	0 to 1.5 In (1)	In (1)
ttH	❑ **[High torque thd.]** High current threshold for [High tq. att.] (ttHA) function assigned to a relay or a logic output (see page 97), as a % of the rated motor torque.	-300% to +300%	100%
ttL	❑ **[Low torque thd.]** Low current threshold for [Low tq. att.] (ttLA) function assigned to a relay or a logic output (see page 97), as a % of the rated motor torque.	-300% to +300%	50%

(1) In corresponds to the rated drive current indicated in the Installation Manual or on the drive nameplate.

★ These parameters only appear if the corresponding function has been selected in another menu. When the parameters can also be accessed and adjusted from within the configuration menu for the corresponding function, their description is detailed in these menus, on the pages indicated, to aid programming.

Buy: www.ValinOnline.com | Phone 844-385-3099 | Email: CustomerService@valin.com

Code	Name/Description	Adjustment range	Factory setting
F9L ★	❑ **[Pulse warning thd.]** Speed threshold measured by the FREQUENCY METER] FqF-) function, page 225, assigned to a relay or a logic output (see page 97).	0 Hz to 30.00 kHz	0 Hz
Ftd	❑ **[Freq. threshold]** Frequency threshold for [Freq.Th.att.] (FtA) function assigned to a relay or a logic output (see page 97), or used by the [PARAM. SET SWITCHING] (MLP-) function, page 192.	0.0 to 1600 Hz	[High speed] (HSP)
F2d	❑ **[Freq. threshold 2]** Frequency threshold for [Freq. Th. 2 attain.] (F2A) function assigned to a relay or a logic output (see page 97), or used by the [PARAM. SET SWITCHING] (MLP-) function, page 192.	0.0 to 1600 Hz	[High speed] (HSP)
FFt ★	❑ **[Freewheel stop Thd]** See page 134 This parameter supports switching from a ramp stop or a fast stop to a freewheel stop below a low speed threshold. It can be accessed if [Type of stop] (Stt) = [Fast stop] (FSt) or [Ramp stop] (rMP). ☐ 0.0: Does not switch to freewheel stop. ☐ 0,1 to 1600 Hz: Speed threshold below which the motor will switch to freewheel stop.	0.0 to 1600 Hz	0.0 Hz
ttd ★	❑ **[Motor therm. level]** See page 214 Trip threshold for motor thermal alarm (logic output or relay)	0 to 118%	100%
LbC ★	❑ **[Load correction]** See page 79 Rated correction in Hz.	0 to 1000 Hz	0

★ These parameters only appear if the corresponding function has been selected in another menu. When the parameters can also be accessed and adjusted from within the configuration menu for the corresponding function, their description is detailed in these menus, on the pages indicated, to aid programming.

Buy: www.ValinOnline.com | Phone 844-385-3099 | Email: CustomerService@valin.com

[1.4 MOTOR CONTROL] (drC-)

With graphic display keypad:

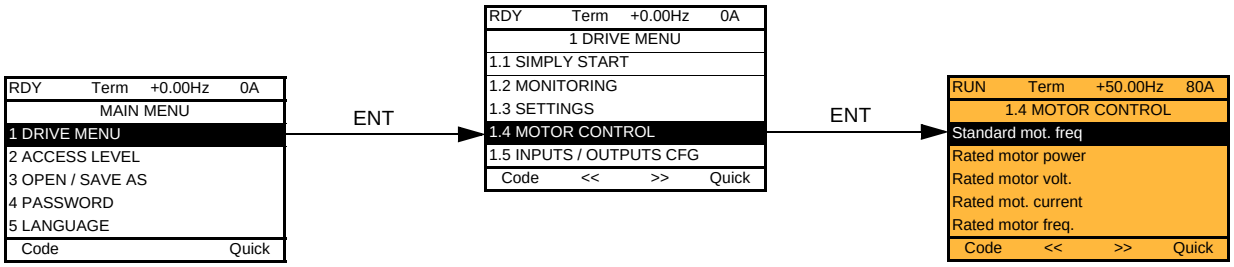

With integrated display keypad:

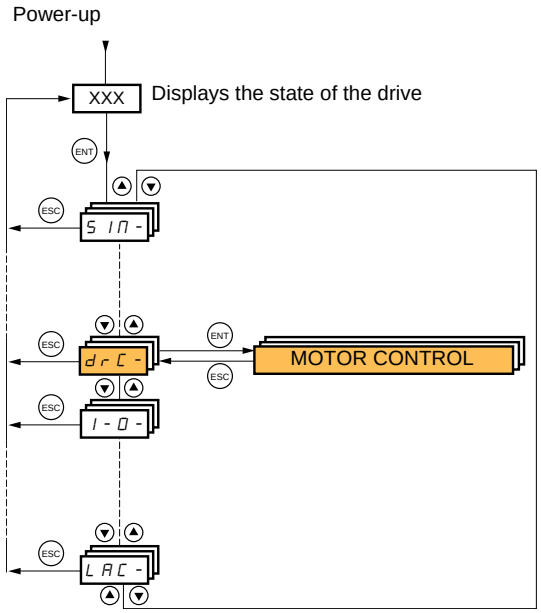

Buy: www.ValinOnline.com | Phone 844-385-3099 | Email: CustomerService@valin.com

[1.4 MOTOR CONTROL] (drC-)

The parameters in the [1.4 MOTOR CONTROL] (drC-) menu can only be modified when the drive is stopped and no run command is present, with the following exceptions:

- [Auto tuning] (tUn) page 65, which may cause the motor to start up.
- Parameters containing the sign ❪❫ in the code column, which can be modified with the drive running or stopped.

Code	Name/Description	Adjustment range	Factory setting
bFr	❑ **[Standard mot. freq]** ☐ **[50Hz IEC]** (50): IEC ☐ **[60Hz NEMA]** (60) : NEMA This parameter modifies the presets of the following parameters: [High speed] (HSP) page 40, [Freq. threshold] (Ftd) page 62, [Rated motor volt.] (UnS), [Rated motor freq.] (FrS) and [Max frequency] (tFr).		[60Hz Nema] (60)
nPr	❑ **[Rated motor power]** The parameter cannot be accessed if [Motor control type] (Ctt) page 66 = [Sync. mot.] (SYn). Rated motor power given on the nameplate, in HP if [Standard mot. freq] (bFr) = [60Hz NEMA] (60) , in KW if [Standard mot. freq] (bFr) = [50Hz IEC] (50) [60Hz NEMA] (60).	According to drive rating	According to drive rating
UnS	❑ **[Rated motor volt.]** The parameter cannot be accessed if [Motor control type] (Ctt) page 66 = [Sync. mot.] (SYn). Rated motor voltage given on the nameplate. MT2●●● : 100 to 240 V MT4●●● : 200 to 480 V	According to drive rating	According to drive rating and [Standard mot. freq] (bFr)
nCr	❑ **[Rated mot. current]** The parameter cannot be accessed if [Motor control type] (Ctt) page 66 = [Sync. mot.] (SYn). Rated motor current given on the nameplate.	0.25 to 1.5 In (1)	According to drive rating and [Standard mot. freq] (bFr)
FrS	❑ **[Rated motor freq.]** The parameter cannot be accessed if [Motor control type] (Ctt) page 66 = [Sync. mot.] (SYn). Rated motor frequency given on the nameplate. The factory setting is 60 Hz, or preset to 50 Hz if [Standard mot. freq] (bFr) is set to 50 Hz. The maximum value is limited to 500 Hz if [Motor control type] (Ctt) (page 66) is not V/F or if the drive rating is higher than MT450 Values between 500 Hz and 1600 Hz are only possible in V/F control and for powers limited to 37 kW (50 HP). In this case configure [Motor control type] (Ctt) before [Rated motor freq.] (FrS).	10 to 1600 Hz	60 Hz
InSP	❑ **[rpm increment]** Increment of parameter [Rated motor speed] (nSP). ☐ **[x1 rpm]** (1): Increment of 1 rpm, to be used if [Rated motor speed] (nSP) does not exceed 65535 rpm. ☐ **[x10 rpm]** (10) : Increment of 10 rpm, to be used if [Rated motor speed] (nSP) exceeds 65535 rpm. ☞ **Note:** Changing [rpm increment] (InSP) will restore [Rated motor speed] (nSP) to its factory setting.		[x1 rpm] (1)
nSP	❑ **[Rated motor speed]** The parameter cannot be accessed if [Motor control type] (Ctt) page 66 = [Sync. mot.] (SYn). Rated motor speed given on the nameplate. Adjustable between 0 and 65535 rpm if [rpm increment] (InSP) = [x1 rpm] (1) or between 0.00 and 96.00 krpm if [rpm increment] (InSP) = [x10 rpm] (10). 0 to 9999 rpm then 10.00 to 65.53 or 96.00 krpm on the integrated display terminal. If, rather than the rated speed, the nameplate indicates the synchronous speed and the slip in Hz or as a %, calculate the rated speed as follows: • Nominal speed = Synchronous speed x $\frac{100 - \text{slip as a \%}}{100}$ or • Nominal speed = Synchronous speed x $\frac{50 - \text{slip in Hz}}{50}$ (50 Hz motors) or • Nominal speed = Synchronous speed x $\frac{60 - \text{slip in Hz}}{60}$ (60 Hz motors)	0 to 96000 rpm	According to drive rating

(1) In corresponds to the rated drive current indicated in the Installation Manual and on the drive nameplate.

Buy: www.ValinOnline.com | Phone 844-385-3099 | Email: CustomerService@valin.com

Code	Name/Description	Factory setting
tFr	❑ **[Max frequency]** The factory setting is 72 Hz, or preset to 60 Hz if [Standard mot. freq] (bFr) is set to 50 Hz. The maximum value is limited by the following conditions: • It must not exceed 10 times the value of [Rated motor freq.] (FrS) • It must not exceed 500 Hz if [Motor control type] (Ctt) (page 66) is not V/F or if the drive rating is higher than MT450 Values between 500 Hz and 1600 Hz are only possible in V/F control and for powers limited to 37 kW (50 HP). In this case configure [Motor control type] (Ctt) before [Max frequency] (tFr).	10 to 1600 Hz
tUn nO YES dOnE	❑ **[Auto tuning]** ☐ **[No]** (nO): Auto-tuning not performed. ☐ **[Yes]** (YES): Auto-tuning is performed as soon as possible, then the parameter automatically changes to [Done] (dOnE). ☐ **[Done]** (dOnE): Use of the values given the last time auto-tuning was performed. **Caution:** • It is essential that all the motor parameters are correctly configured before starting auto-tuning. - Induction motor: [Rated motor volt.](UnS), [Rated motor freq.] (FrS), [Rated mot. current] (nCr), [Rated motor speed] (nSP), [Rated motor power] (nPr) - Synchronous motor: [Nominal I sync.] (nCrS), [Nom motor spdsync] (nSPS), [Pole pairs] (PPnS), [Syn. EMF constant] (PHS), [Autotune L d-axis] (LdS), [Autotune L q-axis] (LqS) If one or more of these parameters is modified after auto-tuning has been performed, [Auto tuning] (tUn) will return to [No] (nO) and the procedure must be repeated. • Auto-tuning is only performed if no stop command has been activated. If a "freewheel stop" or "fast stop" function has been assigned to a logic input, this input must be set to 1 (active at 0). • Auto-tuning takes priority over any run or prefluxing commands, which will be taken into account after the auto-tuning sequence. • If auto-tuning fails, the drive displays [No] (nO) and, depending on the configuration of [Autotune fault mgt] (tnL) page 228, may switch to [Auto-tuning] (tnF) fault mode. • Auto-tuning may last for 1 to 2 seconds. Do not interrupt the process. Wait for the display to change to "[Done] (dOnE)" or "[No] (nO)". ☞ **Note:** During auto-tuning the motor operates at rated current.	[No] (nO)
AUt nO YES	❑ **[Automatic autotune]** ☐ **[No]** (nO): Function inactive ☐ **[Yes]** (YES): Auto-tuning is performed on every power-up. **Caution:** Same comments as for [Auto tuning] (tUn) above.	[No] (nO)
tUS tAb PEnd PrOG FAIL dOnE CUS	❑ **[Auto tuning state]** For information only, cannot be modified. ☐ **[Not done]** (tAb): The default stator resistance value is used to control the motor. ☐ **[Pending]** (PEnd): Auto-tuning has been requested but not yet performed. ☐ **[In Progress]** (PrOG): Auto-tuning in progress ☐ **[Failed]** (FAIL): Auto-tuning has failed. ☐ **[Done]** (dOnE): The stator resistance measured by the auto-tuning function is used to control the motor. ☐ **[Customized]** (CUS): Auto-tuning has been performed, but at least one parameter set by this auto-tuning operation has subsequently been modified. The [Auto tuning] (tUn) parameter then returns to [No] (nO). The following auto-tuning parameters are affected: [Cust. stator R syn] (rSAS) page 69, [Cust stator resist.] (rSA), [Idw] (IdA), [LFw] (LFA) and [T2w] (trA) page 70.	[Not done] (tAb)
PHr AbC ACb	❑ **[Output Ph rotation]** ☐ **[ABC]** (AbC): Forward ☐ **[ACB]** (ACb): Reverse This parameter can be used to reverse the direction of rotation of the motor without reversing the wiring. ☞ **Do not modify the [Output Ph rotation] (PHr) parameter when [Motor control type] (Ctt) page 66 = [FVC] (FUC)**. The direction of rotation must be modified, if required, before or during the procedure to check the encoder page 73 when [Motor control type] (Ctt) is not [FVC] (FUC).	[ABC] (AbC)

Buy: www.ValinOnline.com | Phone 844-385-3099 | Email: CustomerService@valin.com

Code	Name/Description	Adjustment range	Factory setting
CtT	❑ **[Motor control type]**		[SVC V] (UUC)
UUC	☐ **[SVC V]** (UUC): Open-loop voltage flux vector control. It supports operation with a number of motors connected in parallel on the same drive.		
CUC	☐ **[SVC I]** (CUC): Open-loop current flux vector control. This type of control is recommended when replacing an ATV58F used in an open-loop configuration. It does not support operation with a number of motors connected in parallel on the same drive.		
FUC	☐ **[FVC]** (FUC) : Closed-loop current flux vector control for motor with incremental encoder type sensor, can only be selected if an encoder card has been inserted. This type of control is recommended when using in a closed-loop configuration. It provides better performance in terms of speed and torque accuracy and enables torque to be obtained at zero speed. It does not support operation with a number of motors connected in parallel on the same drive. ☞ **It is essential that the encoder check page 73 is performed successfully before selecting [FVC] (FUC).**		
UF2	☐ **[V/F 2pts]** (UF2): Simple V/F profile without slip compensation. It supports operation with: - Special motors (wound rotor, tapered rotor, etc.) - A number of motors in parallel on the same drive - High-speed motors - Motors with a low power rating in comparison to that of the drive 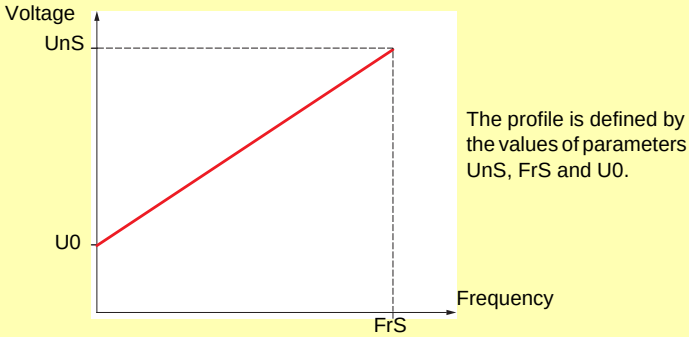 		
UF5	☐ **[V/F 5pts]** (UF5): 5-segment V/F profile: As V/F 2 pts profile but also supports the avoidance of resonance (saturation). 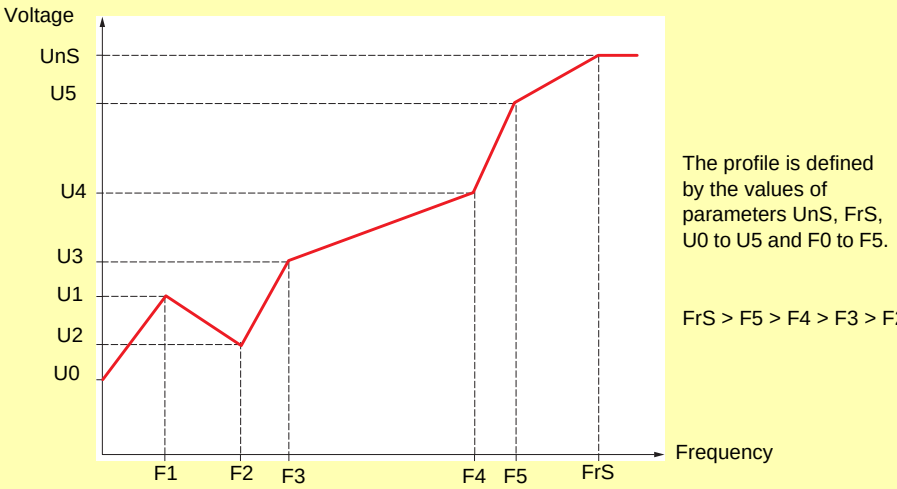 		
SYn	☐ **[Sync. mot.]** (SYn): For synchronous permanent magnet motors with sinusoidal electromotive force (EMF) only. This selection makes the Induction motor parameters inaccessible, and the synchronous motor parameters accessible		

Buy: www.ValinOnline.com | Phone 844-385-3099 | Email: CustomerService@valin.com

Code	Name/Description	Adjustment range	Factory setting
U0	❑ [U0]	0 to 600 or 1000 V according to rating	0
	V/F profile setting. The parameter can be accessed if [Motor control type] (Ctt) = [V/F 2pts] (UF2) or [V/F 5pts] (UF5)		
U1	❑ [U1]	0 to 600 or 1000 V according to rating	0
	V/F profile setting. The parameter can be accessed if [Motor control type] (Ctt) = [V/F 5pts] (UF5)		
F1	❑ [F1]	0 to 1600 Hz	0
	V/F profile setting. The parameter can be accessed if [Motor control type] (Ctt) = [V/F 5pts] (UF5)		
U2	❑ [U2]	0 to 600 or 1000 V according to rating	0
	V/F profile setting. The parameter can be accessed if [Motor control type] (Ctt) = [V/F 5pts] (UF5)		
F2	❑ [F2]	0 to 1600 Hz	0
	V/F profile setting. The parameter can be accessed if [Motor control type] (Ctt) = [V/F 5pts] (UF5)		
U3	❑ [U3]	0 to 600 or 1000 V according to rating	0
	V/F profile setting. The parameter can be accessed if [Motor control type] (Ctt) = [V/F 5pts] (UF5)		
F3	❑ [F3]	0 to 1600 Hz	0
	V/F profile setting. The parameter can be accessed if [Motor control type] (Ctt) = [V/F 5pts] (UF5)		
U4	❑ [U4]	0 to 600 or 1000 V according to rating	0
	V/F profile setting. The parameter can be accessed if [Motor control type] (Ctt) = [V/F 5pts] (UF5)		
F4	❑ [F4]	0 to 1600 Hz	0
	V/F profile setting. The parameter can be accessed if [Motor control type] (Ctt) = [V/F 5pts] (UF5)		
U5	❑ [U5]	0 to 600 or 1000 V according to rating	0
	V/F profile setting. The parameter can be accessed if [Motor control type] (Ctt) = [V/F 5pts] (UF5)		
F5	❑ [F5]	0 to 1600 Hz	0
	V/F profile setting. The parameter can be accessed if [Motor control type] (Ctt) = [V/F 5pts] (UF5)		

Buy: www.ValinOnline.com | Phone 844-385-3099 | Email: CustomerService@valin.com

Code	Name/Description	Adjustment range	Factory setting
UC2	❑ **[Vector Control 2pt]** The parameter can be accessed if [Motor control type] (Ctt) is not [Sync. mot.] (SYn). nO ☐ **[No]** (nO): Function inactive YES ☐ **[Yes]** (YES): Function active. Used in applications in which the motor rated speed and frequency need to be exceeded in order to optimize operation at constant power, or when the maximum voltage of the motor needs to be limited to a value below the line voltage. The voltage/frequency profile must then be adapted in accordance with the motor's capabilities to operate at maximum voltage UCP and maximum frequency FCP. 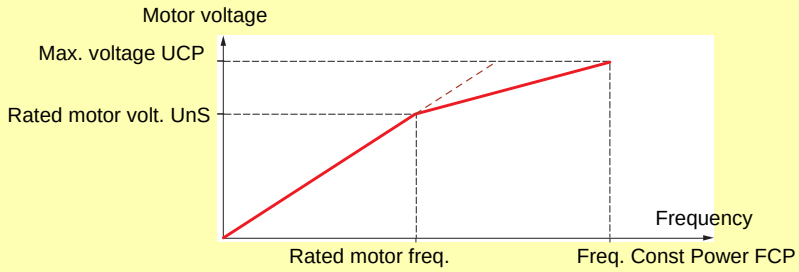 		[No] (nO)
UCP	❑ **[V. constant power]** The parameter can be accessed if [Vector Control 2pt] (UC2) = [Yes] (YES)	According to drive rating	According to drive rating and [Standard mot. freq] (bFr)
FCP	❑ **[Freq. Const Power]** The parameter can be accessed if [Vector Control 2pt] (UC2) = [Yes] (YES)	According to drive rating and [Rated motor freq.] (FrS)	= [Standard mot. freq] (bFr)

Buy: www.ValinOnline.com | Phone 844-385-3099 | Email: CustomerService@valin.com

Synchronous motor parameters:

These parameters can be accessed if [Motor control type] (Ctt) page 66 = [Sync. mot.] (SYn). In this case, the Induction motor parameters cannot be accessed.

Code	Name/Description	Adjustment range	Factory setting
nCrS	❑ **[Nominal I sync.]** Rated synchronous motor current given on the nameplate.	0.25 to 1.5 In (2)	According to drive rating
nSPS	❑ **[Nom motor spdsync]** Rated motor speed given on the nameplate. On the integrated display unit: 0 to 9999 rpm then 10.00 to 60.00 krpm.	0 to 60000 rpm	According to drive rating
PPnS	❑ **[Pole pairs]** Number of pairs of poles on the synchronous motor.	1 to 50	According to drive rating
PHS	❑ **[Syn. EMF constant]** Synchronous motor EMF constant, in mV per rpm (peak voltage per phase). On the integrated display unit: 0 to 9999 then 10.00 to 65.53 (10000 to 65536).	0 to 65535	According to drive rating
LdS	❑ **[Autotune L d-axis]** Axis "d" stator inductance in mH (per phase). On motors with smooth poles [Autotune L d-axis] (LdS) = [Autotune L q-axis] (LqS) = Stator inductance L.	0 to 655.3	According to drive rating
LqS	❑ **[Autotune L q-axis]** Axis "q" stator inductance in mH (per phase). On motors with smooth poles [Autotune L d-axis] (LdS) = [Autotune L q-axis] (LqS) = Stator inductance L.	0 to 655.3	According to drive rating
rSAS	❑ **[Cust. stator R syn]** Cold state stator resistance (per winding) The factory setting is replaced by the result of the auto-tuning operation, if it has been performed. The value can be entered by the user, if he knows it. Value in milliohms (mΩ) up to 75 kW (100 HP), in hundredths of milliohms (mΩ/100) above 75 kW (100 HP). On the integrated display unit: 0 to 9999 then 10.00 to 65.53 (10000 to 65536).	According to drive rating	According to drive rating

Code	Name/Description	Adjustment range	Factory setting
UFr ( )	❑ **[IR compensation]** (1) The parameter can be accessed if [Motor control type] (Ctt) is not [V/F 2pts] (UF2) and [V/F 5pts] (UF5). Used to optimize the torque at very low speed (increase [IR compensation] (UFr) if the torque is insufficient). Check that the [IR compensation] (UFr) value is not too high when the motor is warm (risk of instability).	25 to 200%	100%
SLP ( )	❑ **[Slip compensation]** (1) The parameter can be accessed if [Motor control type] (Ctt) is not [V/F 2pts] (UF2), [V/F 5pts] (UF5) and [Sync. mot.] (SYn). Adjusts the slip compensation around the value set by the rated motor speed. The speeds given on motor nameplates are not necessarily exact. • If slip setting < actual slip: The motor is not rotating at the correct speed in steady state, but at a speed lower than the reference. • If slip setting > actual slip: The motor is overcompensated and the speed is unstable.	0 to 300%	100%

(1) The parameter can also be accessed in the [1.3 SETTINGS] (SEt-) menu.
(2) In corresponds to the rated drive current indicated in the Installation Manual and on the drive nameplate.

( ) Parameter that can be modified during operation or when stopped.

Buy: www.ValinOnline.com | Phone 844-385-3099 | Email: CustomerService@valin.com

Motor parameters that can be accessed in [Expert] mode.

These include:

- Parameters calculated by the drive during auto-tuning, in read-only mode. For example, R1r, calculated cold stator resistance.
- The possibility of replacing some of these calculated parameters by other values, if necessary. For example, R1w, measured cold stator resistance.

When a parameter Xyw is modified by the user, the drive uses it in place of the calculated parameter Xyr.

Ac Inductance motor

If an auto-tuning operation is performed or if one of the motor parameters on which auto-tuning depends is modified ([Rated motor volt.] (UnS), [Rated motor freq.] (FrS), [Rated mot. current] (nCr), [Rated motor speed] (nSP), [Rated motor power] (nPr)), parameters Xyw return to their factory settings.

Code	Name/Description
rSM	❑ **[Stator R measured]** Cold stator resistance, calculated by the drive, in read-only mode. Value in milliohms (mΩ) up to 75 kW (100 HP), in hundredths of milliohms (mΩ/100) above 75 kW (100 HP).
IdM	❑ **[Idr]** Magnetizing current in A, calculated by the drive, in read-only mode.
LFM	❑ **[Lfr]** Leakage inductance in mH, calculated by the drive, in read-only mode.
trM	❑ **[T2r]** Rotor time constant in mS, calculated by the drive, in read-only mode.
nSL	❑ **[Nominal motor slip]** Rated slip in Hz, calculated by the drive, in read-only mode. To modify the rated slip, modify the [Rated motor speed] (nSP) (page 64).
PPn	❑ **[Pr]** Number of pairs of poles, calculated by the drive, in read-only mode.
rSA	❑ **[Cust stator resist.]** Cold state stator resistance (per winding), modifiable value. In milliohms (mΩ) up to 75 kW (100 HP), in hundredths of milliohms (mΩ/100) above 75 kW (100 HP). On the integrated display unit: 0 to 9999 then 10.00 to 65.53 (10000 to 65536).
IdA	❑ **[Idw]** Magnetizing current in A, modifiable value.
LFA	❑ **[Lfw]** Leakage inductance in mH, modifiable value.
trA	❑ **[T2w]** Rotor time constant in mS, modifiable value.

Buy: www.ValinOnline.com | Phone 844-385-3099 | Email: CustomerService@valin.com

Synchronous motor

Code	Name/Description
rSMS	❑ **[R1rS]** Cold state stator resistance (per winding), in read-only mode. This is the drive factory setting or the result of the auto-tuning operation, if it has been performed. Value in milliohms (mΩ) up to 75 kW (100 HP), in hundredths of milliohms (mΩ/100) above 75 kW (100 HP). On the integrated display unit: 0 to 9999 then 10.00 to 65.53 (10000 to 65536).
FrSS	❑ **[Nominal freq sync.]** Motor frequency at rated speed in Hz, calculated by the drive (rated motor frequency), in read-only mode.

Buy: www.ValinOnline.com | Phone 844-385-3099 | Email: CustomerService@valin.com

Selecting the encoder

Follow the recommendations in the catalog and the Installation Manual.

Code	Name/Description	Adjustment range	Factory setting
EnS	❑ **[Encoder type]** To be configured in accordance with the type of card and encoder used (1). nO ☐ **[----]** (nO): Card missing. AAbb ☐ **[AABB]** (AAbb): For signals A, A-, B, B-. Ab ☐ **[AB]** (Ab): For signals A, B. A ☐ **[A]** (A): For signal A. Value cannot be accessed if [Encoder usage] (EnU) page 73 = [Spd fdk reg.] (rEG).		[AABB] (AAbb)
PGI	❑ **[Number of pulses]** Number of pulses per encoder revolution. The parameter can be accessed if an encoder card has been inserted (1).	100 to 5000	1024

(1) The encoder parameters can only be accessed if the encoder card has been inserted, and the available selections will depend on the type of encoder card used. The encoder configuration can also be accessed in the [1.5- INPUTS / OUTPUTS CFG] (I/O) menu.

Buy: www.ValinOnline.com | Phone 844-385-3099 | Email: CustomerService@valin.com

Encoder check procedure

1. Set [Motor control type] (Ctt) to a value other than [FVC] (FUC) even if it is the required configuration.
2. Set up in open-loop mode, following the recommendations on page 5.
3. Set [Encoder usage] (EnU) = [No] (nO).
4. Set [Encoder type] (EnS) and [Number of pulses] (PGI) accordingly for the encoder used.
5. Set [Encoder check] (EnC) = [Yes] (YES)
6. Check that the rotation of the motor is safe.
7. Set the motor rotating at stabilized speed ≈ 15% of the rated speed for at least 3 seconds, and use the [1.2-MONITORING] (SUP-) menu to monitor its behavior.
8. If it trips on an [Encoder fault] (EnF), [Encoder check] (EnC) returns to [No] (nO).
   - Check [Number of pulses] (PGI) and [Encoder type] (EnS).
   - Check that the mechanical and electrical operation of the encoder, its power supply and connections are all correct.
   - Reverse the direction of rotation of the motor ([Output Ph rotation] (PHr) parameter page 65) or the encoder signals.
9. Repeat the operations from 5 onwards until [Encoder check] (EnC) changes to [Done] (dOnE).
10. If necessary, change [Motor control type] (Ctt) to [FVC] (FUC).

Code	Name/Description	Adjustment range	Factory setting
EnC	❑ **[Encoder check]** Check encoder feedback See the procedure below. The parameter can be accessed if an encoder card has been inserted (1). nO ☐ **[Not done]** (nO) Check not performed. YES ☐ **[Yes]** (YES): Activates monitoring of the encoder. dOnE ☐ **[Done]** (dOnE): Check performed successfully. The check procedure checks: - The direction of rotation of the encoder/motor - The presence of signals (wiring continuity) - The number of pulses/revolution If a fault is detected, the drive locks in [Encoder fault] (EnF) fault mode.		[Not done] (nO)
EnU	❑ **[Encoder usage]** The parameter can be accessed if an encoder card has been inserted (1). nO ☐ **[No]** (nO): Function inactive SEC ☐ **[Fdbk monit.]** (SEC): The encoder provides speed feedback for monitoring only. rEG ☐ **[Spd fdk reg.]** (rEG): The encoder provides speed feedback for regulation and monitoring. This configuration is automatic if the drive is configured for closed-loop operation ([Motor control type] (Ctt) = [FVC] (FUC). If [Motor control type] (Ctt) = [SVC V] (UUC) the encoder operates in speed feedback mode and enables static correction of the speed to be performed. This configuration is not accessible for other [Motor control type] (Ctt) values. PGr ☐ **[Speed ref.]** (PGr): The encoder provides a reference.		[No] (nO)

(1) The encoder parameters can only be accessed if the encoder card has been inserted, and the available selections will depend on the type of encoder card used. The encoder configuration can also be accessed in the [1.5- INPUTS / OUTPUTS CFG] (I/O) menu.

Buy: www.ValinOnline.com | Phone 844-385-3099 | Email: CustomerService@valin.com

[ENA SYSTEM]

ENA SYSTEM is a control profile designed for rotating machines with unbalanced load.
It is used primarily for oil pumps. The operating principle applied:

- Allows operation without a braking resistor
- Reduces mechanical stress on the motor shaft
- Reduces line current fluctuations
- Reduces energy consumption by improving the electric power/current ratio

[ENA prop.gain]

This setting is used to achieve a compromise between the reduced energy consumption (and/or line current fluctuations) and the mechanical stress to which the motor shaft is subject.
Energy is saved by reducing current fluctuations and increasing the current while retaining the same average speed.

[ENA integral gain]

This setting is used to smooth the DC bus voltage.

Start up the machine with a low integral and proportional gain (proportional 25% and integral 10%) in order to avoid an overvoltage trip in the absence of a braking resistor. See if these settings are suitable.

Recommended adjustments to be made during operation:

- To eliminate the braking resistor and, therefore, the increase in the DC bus voltage:
  Display the machine speed on the graphic display keypad.
  Reduce the integral gain value until the machine speed drops. When this point is reached, increase the integral gain until the machine speed stabilizes.
  Use the graphic display keypad or an oscilloscope to check that the DC bus voltage is stable.
- To save energy:
  Reducing the proportional gain (gradually) may increase energy savings by reducing the maximum value of the line current, but it will increase speed variations and, therefore, mechanical stress.
  The aim is to identify settings that will enable energy to be saved and minimize mechanical stress.
  When reducing the proportional gain, it may be necessary to readjust the integral gain in order to avoid an overvoltage trip.

Note: Once the adjustments are complete, check that the pump starts up correctly. If the ENA integral gain setting is too low, this may lead to insufficient torque on startup.

[Reduction ratio]

This setting corresponds to the motor speed ahead of gearbox/speed after gearbox ratio. This parameter is used to display the average speed in Hz and the machine speed in customer units (e.g., in strokes per minute) on the graphic display keypad. In order to be displayed on the graphic display, these values must be selected in the [1.2 MONITORING] (SUP-) menu.

Buy: www.ValinOnline.com | Phone 844-385-3099 | Email: CustomerService@valin.com

Code	Name/Description		Adjustment range	Factory setting
EnA nO YES	❑ **[ENA system]** The parameter can be accessed if [Motor control type] (Ctt) = [SVC V] (UUC), see page 66. ☐ **[No]** (nO) : Function inactive ☐ **[Yes]** (YES) : Function active.			[No] (nO)
GPE ( )	❑ **[ENA prop.gain]** The parameter can be accessed if [ENA system] (EnA) = [Yes] (YES)	(1)	1 to 9999	250
GIE ( )	❑ **[ENA integral gain]** The parameter can be accessed if [ENA system] (EnA) = [Yes] (YES)	(1)	0 to 9999	100
rAP ( )	❑ **[Reduction ratio]** The parameter can be accessed if [ENA system] (EnA) = [Yes] (YES)	(1)	10.0 to 999.9	10

(1) The parameter can also be accessed in the [1.3 SETTINGS] (SEt-)menu.

( ) Parameter that can be modified during operation or when stopped.

Buy: www.ValinOnline.com | Phone 844-385-3099 | Email: CustomerService@valin.com

Code	Name/Description	Adjustment range	Factory setting
OFI nO YES	❑ **[Sinus filter]**		[No] (nO)

☐ **[No]** (nO): No filter
☐ **[Yes]** (YES): Use of a filteror an AC reactor on the output of the drive, to limit overvoltages on the motor and reduce the ground fault leakage current.
[Sinus filter] (OFI) is forced to [No] (nO) on MT2P5 and MT401.

☞ **Note:** The settings for [Current Limitation] (CLI) and [I Limit. 2 value] (CL2) page 56 must be made once [Sinus filter] (OFI) has been set to [Yes] (YES) and [Motor control type] (Ctt) page 66 has been set to [V/F 2pts] (UF2) or [V/F 5pts] (UF5). This is due to the fact that for certain ratings, this configuration will result in a reduced factory setting (1.36 In) for current limitations.

CAUTION

If [Sinus filter] (OFI) = [Yes] (YES), [Motor control type] (Ctt) page 66 must be [V/F 2pts] (UF2), [V/F 5pts] (UF5), or [SVC V] (UUC) **only**, and [Max frequency] (tFr) **must not exceed 100 Hz**.
Failure to follow this instruction can result in equipment damage.

SFr ( )	❑ **[Switching freq.]**	(1)	According to rating	According to rating

Switching frequency setting.
Adjustment range: This can vary between 1 and 16 kHz, but the minimum and maximum values, as well as the factory setting, can be limited in accordance with the type of drive (MT Series or W), the rating and the configuration of the [Sinus filter] (OFI) and [Motor surge limit] (SUL) parameters, page 77.

If the value is less than 2 kHz, [Current Limitation] (CLI) and [I Limit. 2 value] (CL2) page 56 are limited to 1.36 In.
Adjustment with drive running:
- If the initial value is less than 2 kHz, it is not possible to increase it above 1.9 kHz while running.
- If the initial value is greater than or equal to 2 kHz, a minimum of 2 kHz must be maintained while running.
Adjustment with the drive stopped: No restrictions.

☞ **Note:** In the event of excessive temperature rise, the drive will automatically reduce the switching frequency and reset it once the temperature returns to normal.

☞ **Note:** If [Motor control type] (Ctt) page 66 = [FVC] (FUC), we do not recommend setting the switching frequency to a value less than 2 kHz (in order to avoid speed instability).

CAUTION

On MT401 to MT405, drives, if the RFI filters are disconnected (operation on an IT system), the drive's switching frequency must not exceed 4 kHz.
Failure to follow this instruction can result in equipment damage.

CLI ( )	❑ **[Current Limitation]**	(1)	0 to 1.65 In (2)	1.5 In (2)

Used to limit the motor current.
The adjustment range is limited to 1.36 In if [Switching freq.] (SFr) is less than 2 kHz.
☞ **Note:** If the setting is less than 0.25 In, the drive may lock in [Output Phase Loss] (OPF) fault mode if this has been enabled (see page 214). If it is less than the no-load motor current, the limitation no longer has any effect.

(1) The parameter can also be accessed in the [1.3 SETTINGS] (SEt-)menu.
(2) In corresponds to the rated drive current indicated in the Installation Manual and on the drive nameplate.

( ) Parameter that can be modified during operation or when stopped.

Buy: www.ValinOnline.com | Phone 844-385-3099 | Email: CustomerService@valin.com

Code	Name/Description	Adjustment range	Factory setting
nrd nO YES	❑ **[Noise reduction]** ☐ **[No]** (nO): Fixed frequency. Factory setting at and above 55 kW (75 HP) and at and above 90 kW (125 HP) ☐ **[Yes]** (YES): Frequency with random modulation. Factory setting up to 45 kW (60 HP) and up to 75 kW (100 HP) Random frequency modulation prevents any resonance, which may occur at a fixed frequency.		According to rating
SUL nO YES	❑ **[Motor surge limit.]** This function limits motor overvoltages and is useful in the following applications: - NEMA motors - Japanese motors - Spindle motors - Rewound motors ☐ **[No]** (nO) : Function inactive ☐ **[Yes]** (YES) : Function active This parameter is forced to [No] (nO) if [Sinus filter] (OFI) previous page = [Yes] (YES). This parameter can remain = [No] (nO) for 230/400 V motors used at 230 V, or if the length of cable between the drive and the motor does not exceed: - 4 m with unshielded cables - 10 m with shielded cables		[No] (nO)
SOP	❑ **[Volt surge limit. opt]** Optimization parameter for transient overvoltages at the motor terminals. Can be accessed if [Motor surge limit.] (SUL) = [Yes] (YES). Set to 6, 8, or 10 µs, according to the following table.		10 µs

The value of the "SOP" parameter corresponds to the attenuation time of the cable used. It is defined to prevent the superimposition of voltage wave reflections resulting from long cable lengths. It limits overvoltages to twice the DC bus rated voltage.
The tables on the following page give examples of correspondence between the "SOP" parameter and the length of the cable between the drive and the motor. For longer cable lengths, a sinusoidal filter or a dV/dt protection filter must be used.

- For motors in parallel, the sum of all the cable lengths must be taken into consideration. Compare the length given in the table row corresponding to the power for one motor with that corresponding to the total power, and select the shorter length. Example: Two 7.5 kW (10 HP) motors - take the lengths on the 15 kW (20 HP) table row, which are shorter than those on the 7.5 kW (10 HP) row, and divide by the number of motors to obtain the length per motor (with unshielded "GORSE" cable and SOP = 6, the result is 40/2 = 20 m maximum for each 7.5 kW (10 HP) motor).

In special cases (for example, different types of cable, different motor powers in parallel, different cable lengths in parallel, etc.), we recommend using an oscilloscope to check the overvoltage values obtained at the motor terminals.

To retain the overall drive performance, do not increase the SOP value unnecessarily.

Buy: www.ValinOnline.com | Phone 844-385-3099 | Email: CustomerService@valin.com

Tables giving the correspondence between the SOP parameter and the cable length, for 400 V line supply

MT Series	Motor		Cable cross-section		Maximum cable length in meters					
Reference	Power				Unshielded "GORSE" cable Type H07 RN-F 4Gxx			Shielded "GORSE" cable Type GVCSTV-LS/LH		
	kW	HP	in mm^2	AWG	**SOP = 10**	**SOP = 8**	**SOP = 6**	**SOP = 10**	**SOP = 8**	**SOP = 6**
MT401	0.75	1	1.5	14	109.36 yd	76.55 yd	49.21 yd	114.83 yd	92.96 yd	71.08 yd
MT402	1.5	2	1.5	14	109.36 yd	76.55 yd	49.21 yd	114.83 yd	92.96 yd	71.08 yd
MT403	2.2	3	1.5	14	120.30 yd	71.08 yd	49.21 yd	114.83 yd	92.96 yd	71.08 yd
MT405	4	5	1.5	14	120.30 yd	71.08 yd	49.21 yd	114.83 yd	92.96 yd	71.08 yd
MT407	5.5	7.5	2.5	14	131.23 yd	71.08 yd	49.21 yd	114.83 yd	92.96 yd	71.08 yd
MT410	7.5	10	2.5	14	131.23 yd	71.08 yd	49.21 yd	114.83 yd	92.96 yd	71.08 yd
MT415	11	15	6	10	125.77 yd	65.62 yd	49.21 yd	109.36 yd	82.02 yd	60.15 yd
MT420	15	20	10	8	114.83 yd	65.62 yd	43.74 yd	109.36 yd	76.55 yd	54.68 yd
MT425	18.5	25	10	8	125.77 yd	65.62 yd	38.28 yd	164.04 yd	82.02 yd	54.68 yd
MT430	22	30	16	6	164.04 yd	65.62 yd	43.74 yd	164.04 yd	76.55 yd	54.68 yd
MT440	30	40	25	4	164.04 yd	60.15 yd	38.28 yd	164.04 yd	76.55 yd	54.68 yd
MT450	37	50	35	5	218.72 yd	71.08 yd	54.68 yd	164.04 yd	76.55 yd	54.68 yd
MT460	45	60	50	0	218.72 yd	60.15 yd	32.81 yd	164.04 yd	65.62 yd	43.74 yd
MT475	55	75	70	2/0	218.72 yd	54.68 yd	27.34 yd	164.04 yd	60.15 yd	32.81 yd
MT4100	75	100	95	4/0	218.72 yd	49.21 yd	27.34 yd	164.04 yd	60.15 yd	32.81 yd

MT Series	Motor		Cable cross-section		Maximum cable length in meters					
Reference	Power				Shielded "BELDEN" cable Type 2950x			Shielded "PROTOFLEX" cable Type EMV 2YSLCY-J		
	kW	HP	in mm^2	AWG	**SOP = 10**	**SOP = 8**	**SOP = 6**	**SOP = 10**	**SOP = 8**	**SOP = 6**
MT401	0.75	1	1.5	14	54.68 yd	43.74 yd	32.81 yd			
MT402	1.5	2	1.5	14	54.68 yd	43.74 yd	32.81 yd			
MT403	2.2	3	1.5	14	54.68 yd	43.74 yd	32.81 yd			
MT405	4	5	1.5	14	54.68 yd	43.74 yd	32.81 yd			
MT407	5.5	7.5	2.5	14	54.68 yd	43.74 yd	32.81 yd			
MT410	7.5	10	2.5	14	54.68 yd	43.74 yd	32.81 yd			
MT415	11	15	6	10	54.68 yd	43.74 yd	32.81 yd			
MT420	15	20	10	8	54.68 yd	43.74 yd	32.81 yd			
MT425	18.5	25	10	8	54.68 yd	43.74 yd	32.81 yd			
MT430	22	30	16	6				82.02 yd	43.74 yd	27.34 yd
MT440	30	40	25	4				82.02 yd	43.74 yd	27.34 yd
MT450	37	50	35	5				82.02 yd	43.74 yd	27.34 yd
MT460	45	60	50	0				82.02 yd	43.74 yd	27.34 yd
MT475	55	75	70	2/0				82.02 yd	32.81 yd	16.40 yd
MT4100	75	100	95	4/0				82.02 yd	32.81 yd	16.40 yd

For 230/400 V motors used at 230 V, the [Motor surge limit.] (SUL) parameter can remain = [No] (nO).

Buy: www.ValinOnline.com | Phone 844-385-3099 | Email: CustomerService@valin.com

Code	Name/Description	Adjustment range	Factory setting
Ubr	❑ **[Braking level]** DC bus voltage threshold above which the braking transistor cuts in to limit this voltage. MT2: factory setting 395 V. MT4: factory setting 785 V. The adjustment range depends on the voltage rating of the drive and the [Mains voltage] (UrES) parameter, page 218.		According to drive voltage rating
bbA nO YES	❑ **[Braking balance]** ☐ **[No]** (nO) : Function inactive ☐ **[Yes]** (YES) : Function active, to be used on drives connected in parallel via their DC bus. Used to balance the braking power between the drives. The [Braking level] (Ubr) parameter must be set to the same value on the various drives. The value[Yes] (YES) is possible only if [Dec ramp adapt.] (brA) = [No] (nO) (see page 133)		[No] (nO)
LbA nO YES	❑ **[Load sharing]** When 2 motors are connected mechanically and therefore at the same speed, and each is controlled by a drive, this function can be used to improve torque distribution between the two motors. To do this, it varies the speed based on the torque. ☐ **[No]** (nO) : Function inactive ☐ **[Yes]** (YES) : Function active The parameter can only be accessed if [Motor control type] (Ctt) page 66 is not [V/F 2pts] (UF2) or [V/F 5pts] (UF5).		[No] (nO)
LbC	❑ **[Load correction]** (1) Rated correction in Hz. The parameter can be accessed if [Load sharing] (LbA) = [Yes] (YES) 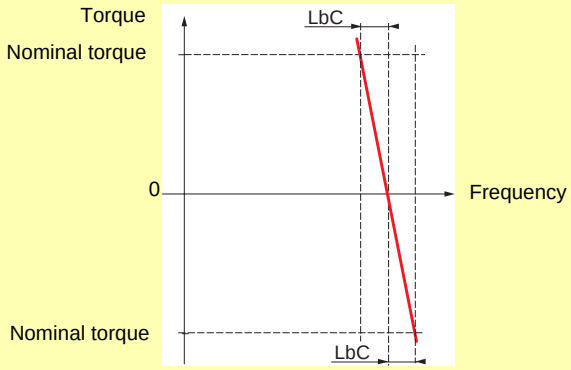	0 to 1000 Hz	0

(1) The parameter can also be accessed in the [1.3 SETTINGS] (SEt-)menu.

Parameter that can be modified during operation or when stopped.

Buy: www.ValinOnline.com | Phone 844-385-3099 | Email: CustomerService@valin.com

Load sharing, parameters that can be accessed at expert level

Principle

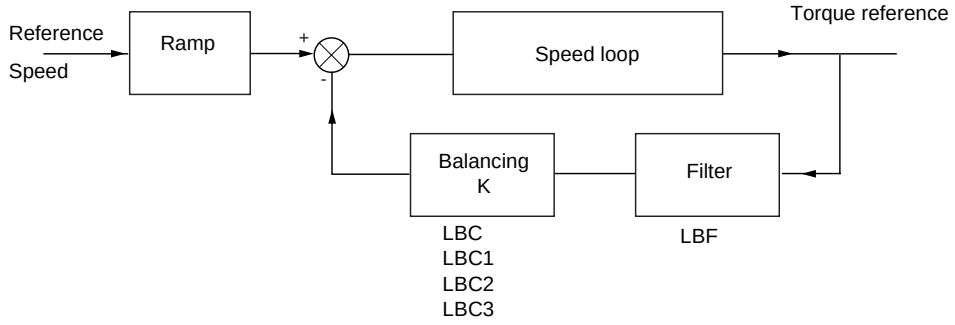

The load sharing factor K is determined by the torque and speed, with two factors K1 and K2 (K = K1 x K2).

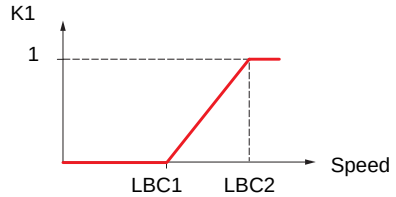

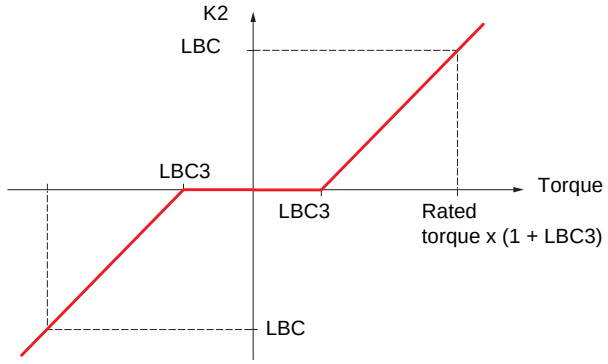

Buy: www.ValinOnline.com | Phone 844-385-3099 | Email: CustomerService@valin.com

Code	Name/Description	Adjustment range	Factory setting
LbC1	❑ **[Correction min spd]** The parameter can be accessed if [Load sharing] (LbA) = [Yes] (YES) Minimum speed for load correction in Hz. Below this threshold, no corrections are made. Used to prevent correction at very low speed if this would hamper rotation of the motor.	0 to 999.9 Hz	0
LbC2	❑ **[Correction max spd]** The parameter can be accessed if [Load sharing] (LbA) = [Yes] (YES) Speed threshold in Hz above which maximum load correction is applied.	[Correction min spd] (LbC1) + 0.1 at 1000 Hz	0,1
LbC3	❑ **[Torque offset]** The parameter can be accessed if [Load sharing] (LbA) = [Yes] (YES) Minimum torque for load correction as a % of the rated torque. Below this threshold, no corrections are made. Used to avoid torque instabilities when the torque direction is not constant.	0 to 300%	0%
LbF	❑ **[Sharing filter]** The parameter can be accessed if [Load sharing] (LbA) = [Yes] (YES) Time constant (filter) for correction in ms. Used in the event of flexible mechanical coupling in order to avoid instabilities.	100 ms to 20 s	100 ms

Parameter that can be modified during operation or when stopped.

Buy: www.ValinOnline.com | Phone 844-385-3099 | Email: CustomerService@valin.com

Using graphic display keypad:

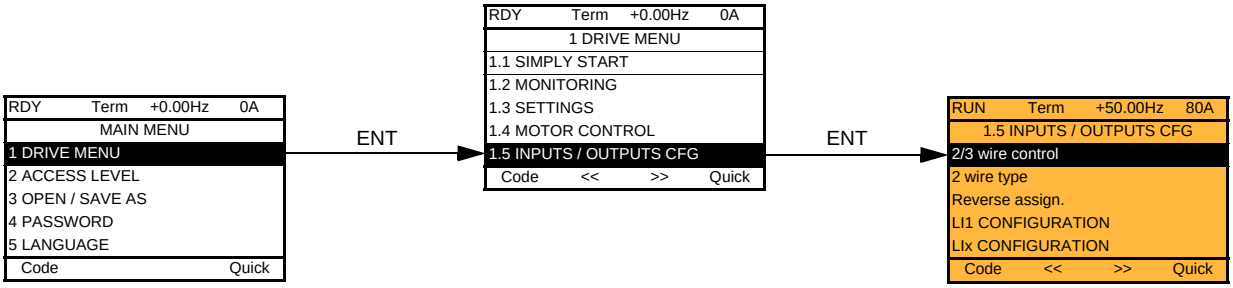

Using integrated display keypad:

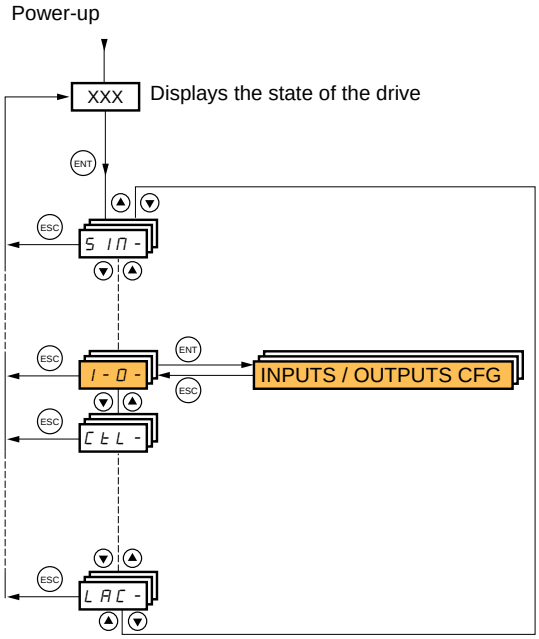

Buy: www.ValinOnline.com | Phone 844-385-3099 | Email: CustomerService@valin.com

The parameters in the [1.5 INPUTS / OUTPUTS CFG] (I-O-) menu can only be modified when the drive is stopped and no run command is present.

Code	Name/Description	Adjustment range	Factory setting
tCC	❑ **[2/3 wire control]**		[2 wire] (2C)
2C	☐ **[2 wire]** (2C)		
3C	☐ **[3 wire]** (3C)		

2-wire control: This is the input state (0 or 1) or edge (0 to 1 or 1 to 0), which controls running or stopping.

Example of "source" wiring:

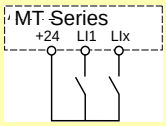

LI1: forward
LIx: reverse

3-wire control (pulse commands): A "forward" or "reverse" pulse is sufficient to command starting, a "stop" pulse is sufficient to command stopping.

Example of "source" wiring:

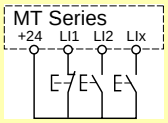

LI1: stop
LI2: forward
LIx: reverse

WARNING

UNINTENDED EQUIPMENT OPERATION

To change the assignment of [2/3 wire control] (tCC) press and hold down the “ENT” key for 2 s.
It causes the following functions to return to factory setting: [2 wire type] (tCt) and [Reverse assign.] (rrS) below, and all functions which assign logic inputs and analog inputs.
The macro configuration selected will also be reset it if has been customized (loss of custom settings).
It is advisable to configure this parameter before configuring the [1.6 COMMAND] (CtL-) and [1.7 APPLICATION FUNCT.] (FUn-) menus.
Check that this change is compatible with the wiring diagram used.
Failure to follow these instructions can result in death or serious injury.

tCt	❑ **[2 wire type]**		[Transition] (trn)
LEL	☐ **[Level]** (LEL): State 0 or 1 is taken into account for run (1) or stop (0).		
trn	☐ **[Transition]** (trn): A change of state is necessary to initiate operation, in order to prevent accidental restarts after a break in the power supply.		
PFO	☐ **[Fwd priority]** (PFO): State 0 or 1 is taken into account for run or stop, but the "forward" input always takes priority over the "reverse" input.		
rrS	❑ **[Reverse assign.]**		[LI2] (LI2)
nO	☐ **[No]** (nO): Not assigned		
LI1	☐ **[LI1]** (LI1) to **[LI6]** (LI6)		
-	☐ **[LI7]** (LI7) to **[LI10]** (LI10): If MT-VW3A3201 logic I/O card has been inserted		
-	☐ **[LI11]** (LI11) to **[LI14]** (LI14): If MT-VW3A3202 extended I/O card has been inserted		
C101	☐ **[C101]** (C101) to **[C115]** (C115): With integrated Modbus in [I/O profile] (IO)		
-	☐ **[C201]** (C201) to **[C215]** (C215): With integrated CANopen in [I/O profile] (IO)		
-	☐ **[C301]** (C301) to **[C315]** (C315): With a communication card in [I/O profile] (IO)		
-	☐ **[CD00]** (Cd00) to **[CD13]** (Cd13): In [I/O profile] (IO) can be switched with possible logic inputs		
CD00	☐ **[CD14]** (Cd14) to **[CD15]** (Cd15): In [I/O profile] (IO) can be switched without logic inputs		
-	Assignment of the reverse direction command.		

Buy: www.ValinOnline.com | Phone 844-385-3099 | Email: CustomerService@valin.com

Code	Name/Description	Adjustment range	Factory setting
L I -	**[LI1 CONFIGURATION]**		
L IA	**[LI1 assignment]** Read-only parameter, cannot be configured. It displays all the functions that are assigned to input LI1 in order to check for multiple assignments.		
L Id	**[LI1 On Delay]** This parameter is used to take account of the change of the logic input to state 1 with a delay that can be adjusted between 0 and 200 milliseconds, in order to filter out possible interference. The change to state 0 is taken into account without delay. **WARNING** **UNINTENDED EQUIPMENT OPERATION** Check that the delay set does not pose a risk or lead to undesired operation. The relative order in which these inputs are taken into account may be modified according to the delay values of the various logic inputs, and thus lead to unintended operation. **Failure to follow these instructions can result in death or serious injury.**	0 to 200 ms	0
L - -	**[LIx CONFIGURATION]**		
	All the logic inputs available on the drive are processed as in the example for LI1 above, up to LI6, LI10 or LI14, depending on whether or not option cards have been inserted.		

Buy: www.ValinOnline.com | Phone 844-385-3099 | Email: CustomerService@valin.com

Configuration of analog inputs and Pulse input

The minimum and maximum input values (in volts, mA, etc.) are converted to % in order to adapt the references to the application.

Minimum and maximum input values:

The minimum value corresponds to a reference of 0% and the maximum value to a reference of 100%. The minimum value may be greater than the maximum value:

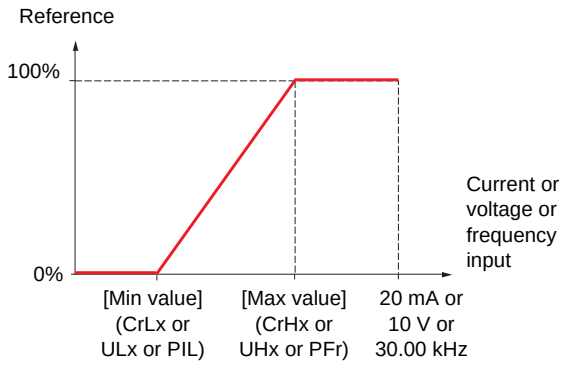

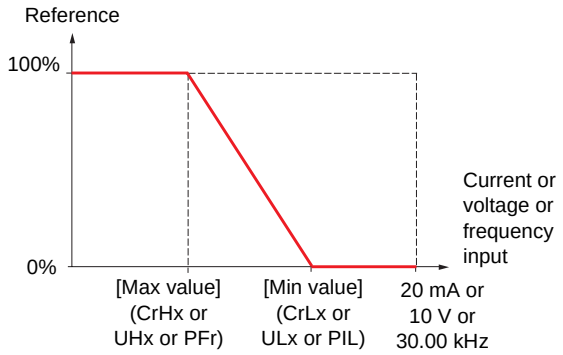

For +/- bidirectional inputs, the min. and max. are relative to the absolute value, for example, +/- 2 to 8 V.

Negative min. value of Pulse input:

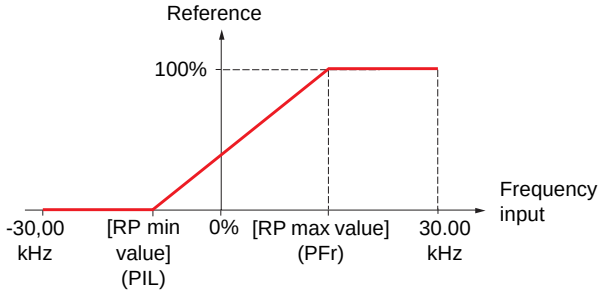

Range (output values): For analog inputs only

This parameter is used to configure the reference range to [0% ➞100%] or [-100% ➞ +100%] in order to obtain a bidirectional output from a unidirectional input.

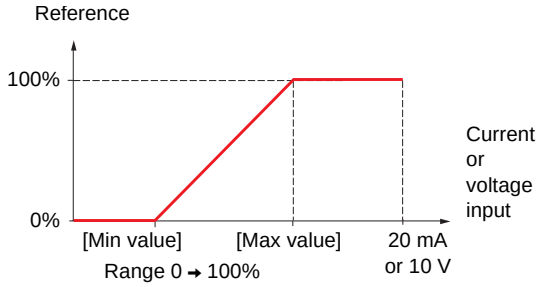

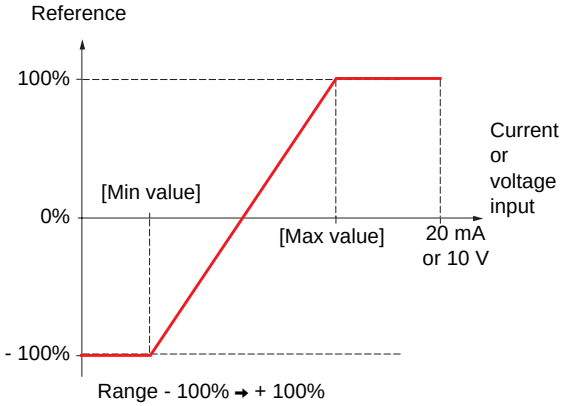

Buy: www.ValinOnline.com | Phone 844-385-3099 | Email: CustomerService@valin.com

Code	Name/Description	Adjustment range	Factory setting
bSP	❑ **[Reference template]**		[Standard] (bSd)
bSd	☐ **[Standard]** (bSd)		

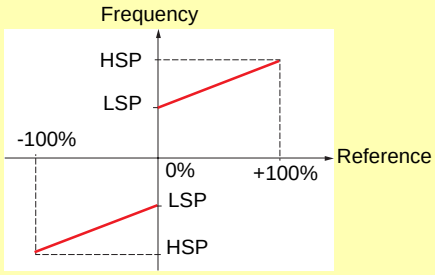

At zero reference the frequency = LSP

bLS	☐ **[Pedestal]** (bLS)		

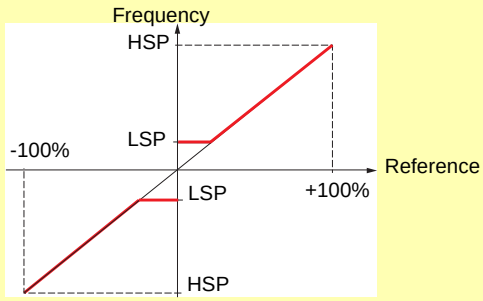

At reference = 0 to LSP the frequency = LSP

bnS	☐ **[Deadband]** (bnS)		

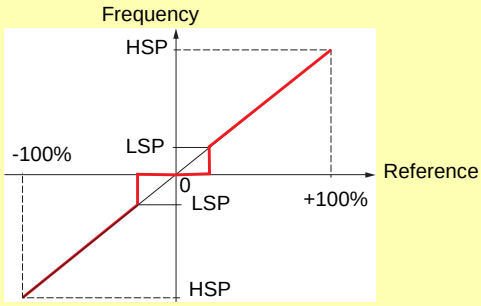

At reference = 0 to LSP the frequency = 0

bnS0	☐ **[Deadband 0]** (bnS0)		

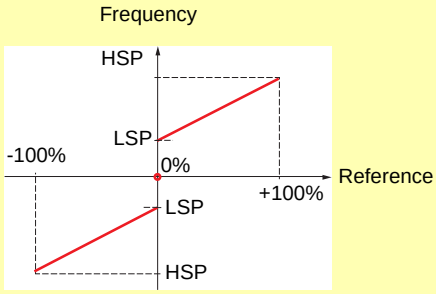

This operation is the same as [Standard] (bSd), except that in the following cases at zero reference, the frequency = 0:
• The signal is less than [Min value], which is greater than 0 (example 1 V on a 2 - 10 V input)
• The signal is greater than [Min value], which is greater than [Max value] (example 11 V on a 10 - 0 V input).

If the input range is configured as "bidirectional", operation remains identical to [Standard] (bSd).

This parameter defines how the speed reference is taken into account, for analog inputs and Pulse input only. In the case of the PID regulator, this is the PID output reference.
The limits are set by the [Low speed] (LSP) and [High speed] (HSP) parameters, page 40

Buy: www.ValinOnline.com | Phone 844-385-3099 | Email: CustomerService@valin.com

Delinearization: For analog inputs only

The input can be delinearized by configuring an intermediate point on the input/output curve of this input:

For range 0 → 100%

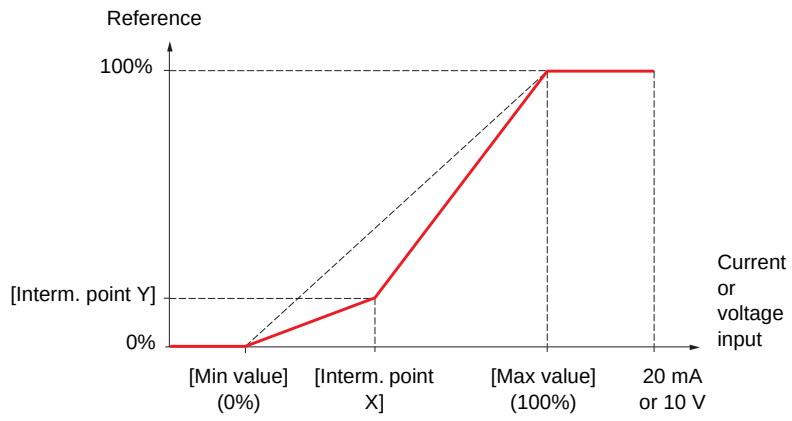

Note: For [Interm. point X], 0% corresponds to [Min value] and 100% to [Max value]

For range -100% → 100%

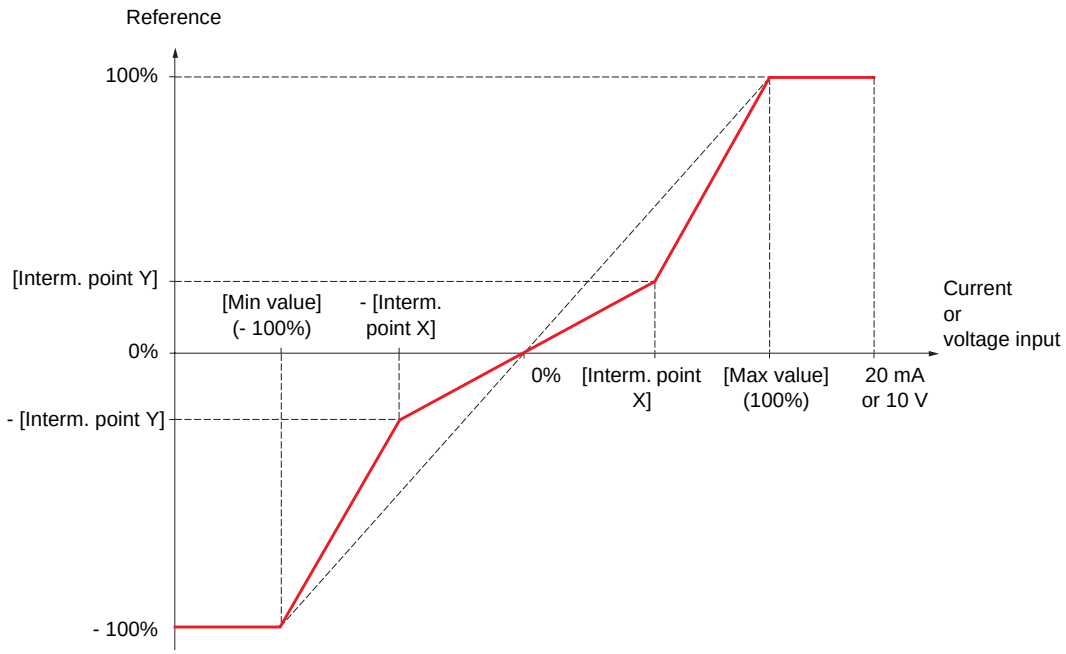

Buy: www.ValinOnline.com | Phone 844-385-3099 | Email: CustomerService@valin.com

Code	Name/Description	Adjustment range	Factory setting
AI1-	**[AI1 CONFIGURATION]**		
AI1A	**[AI1 assignment]** Read-only parameter, cannot be configured. It displays all the functions associated with input AI1 in order to check, for example, for compatibility problems.		
AI1t 10U n10U	**[AI1 Type]** **[Voltage]** (10U): Positive voltage input (negative values are interpreted as zero: the input is unidirectional). **[Voltage +/-]** (n10U): Positive and negative voltage input (the input is bidirectional).		[Voltage] (10U)
UIL1	**[AI1 min value]**	0 to 10.0 V	0 V
UIH1	**[AI1 max value]**	0 to 10.0 V	10.0 V
AI1F	**[AI1 filter]** Interference filtering.	0 to 10.00 s	0 s
AI1E	**[AI1 Interm. point X]** Input delinearization point coordinate. • 0% corresponds to [AI1 min value] (UIL1). • 100% corresponds to [AI1 max value] (UIH1).	0 to 100%	0%
AI1S	**[AI1 Interm. point Y]** Output delinearization point coordinate (frequency reference).	0 to 100%	0%

Buy: www.ValinOnline.com | Phone 844-385-3099 | Email: CustomerService@valin.com

Code	Name/Description	Adjustment range	Factory setting
A I 2 -	**[AI2 CONFIGURATION]**		
A I 2 A	**[AI2 assignment]** Read-only parameter, cannot be configured. It displays all the functions associated with input AI2 in order to check, for example, for compatibility problems.		
A I 2 t 1 0 U 0 A	**[AI2 Type]** ☐ **[Voltage]** (10U): Voltage input ☐ **[Current]** (0 A): Current input		[Current] (0 A)
C r L 2	**[AI2 min value]** The parameter can be accessed if [AI2 Type] (AI2t) = [Current] (0 A)	0 to 20.0 mA	0 mA
U I L 2	**[AI2 min value]** The parameter can be accessed if [AI2 Type] (AI2t) = [Voltage] (10U)	0 to 10.0 V	0 V
C r H 2	**[AI2 max. value]** The parameter can be accessed if [AI2 Type] (AI2t) = [Current] (0 A)	0 to 20.0 mA	20.0 mA
U I H 2	**[AI2 max. value]** The parameter can be accessed if [AI2 Type] (AI2t) = [Voltage] (10U)	0 to 10.0 V	10.0 V
A I 2 F	**[AI2 filter]** Interference filtering.	0 to 10.00 s	0 s
A I 2 L P O S n E G	**[AI2 range]** ☐ **[0 - 100%]** (POS): Unidirectional input ☐ **[+/- 100%]** (nEG): Bidirectional input Example: On a 0/10 V input - 0 V corresponds to reference -100% - 5 V corresponds to reference 0% - 10 V corresponds to reference + 100%		[0 - 100%] (POS)
A I 2 E	**[AI2 Interm. point X]** Input delinearization point coordinate. • 0% corresponds to [Min value] if the range is 0 → 100%. • 0% corresponds to $\frac{[\text{Max value}] + [\text{Min value}]}{2}$ if the range is -100% → + 100%. • 100% corresponds to [Max value].	0 to 100%	0%
A I 2 S	**[AI2 Interm. point Y]** Output delinearization point coordinate (frequency reference).	0 to 100%	0%

Buy: www.ValinOnline.com | Phone 844-385-3099 | Email: CustomerService@valin.com

Code	Name/Description	Adjustment range	Factory setting
AI3 -	**[AI3 CONFIGURATION]** Can be accessed if a MT-VW3A3202 option card has been inserted		
AI3A	**[AI3 assignment]** Read-only parameter, cannot be configured. It displays all the functions associated with input AI3 in order to check, for example, for compatibility problems.		
AI3t 0A	**[AI3 Type]** Read-only parameter, cannot be configured. ☐ **[Current]** (0 A): Current input		[Current] (0 A)
CrL3	**[AI3 min. value]**	0 to 20.0 mA	0 mA
CrH3	**[AI3 max. value]**	0 to 20.0 mA	20.0 mA
AI3F	**[AI3 filter]** Interference filtering.	0 to 10.00 s	0 s
AI3L POS nEG	**[AI3 range]** ☐ **[0 - 100%]** (POS): Unidirectional input ☐ **[+/- 100%]** (nEG): Bidirectional input Example: On a 4 - 20 mA input - 4 mA corresponds to reference -100% - 12 mA corresponds to reference 0% - 20 mA corresponds to reference + 100% Since AI3 is, in physical terms, a bidirectional input, the [+/- 100%] (nEG) configuration must only be used if the signal applied is unidirectional. A bidirectional signal is not compatible with a bidirectional configuration.		[0 - 100%] (POS)
AI3E	**[AI3 Interm. point X]** Input delinearization point coordinate. • 0% corresponds to [Min value] (CrL3) if the range is 0 → 100%. • 0% corresponds to $\frac{\text{[AI3 max. value] (CrH3)} - \text{[AI3 min. value] (CrL3)}}{2}$ if the range is -100% → +100%. • 100% corresponds to [AI3 max. value] (CrH3).	0 to 100%	0%
AI3S	**[AI3 Interm. point Y]** Output delinearization point coordinate (frequency reference).	0 to 100%	0%

Buy: www.ValinOnline.com | Phone 844-385-3099 | Email: CustomerService@valin.com

Code	Name/Description	Adjustment range	Factory setting
AI4-	**[AI4 CONFIGURATION]** Can be accessed if a MT-VW3A3202 option card has been inserted		
AI4A	**[AI4 assignment]** Read-only parameter, cannot be configured. It displays all the functions associated with input AI4 in order to check, for example, for compatibility problems.		
AI4t 10U 0A	**[AI4 Type]** ☐ **[Voltage]** (10U): Voltage input ☐ **[Current]** (0 A): Current input		[Voltage] (10U)
CrL4	**[AI4 min value]** The parameter can be accessed if [AI4 Type] (AI4t) = [Current] (0 A)	0 to 20.0 mA	0 mA
U1L4	**[AI4 min value]** The parameter can be accessed if [AI4 Type] (AI4t) = [Voltage] (10U)	0 to 10.0 V	0 V
CrH4	**[AI4 max value]** The parameter can be accessed if [AI4 Type] (AI4t) = [Current] (0 A)	0 to 20.0 mA	20.0 mA
U1H4	**[AI4 max value]** The parameter can be accessed if [AI4 Type] (AI4t) = [Voltage] (10U)	0 to 10.0 V	10.0 V
AI4F	**[AI4 filter]** Interference filtering.	0 to 10.00 s	0 s
AI4L POS nEG	**[AI4 range]** ☐ **[0 - 100%]** (POS): Unidirectional input ☐ **[+/- 100%]** (nEG): Bidirectional input Example: On a 0/10 V input - 0 V corresponds to reference -100% - 5 V corresponds to reference 0% - 10 V corresponds to reference + 100%		[0 - 100%] (POS)
AI4E	**[AI4 Interm.point X]** Input delinearization point coordinate. • 0% corresponds to [Min value] if the range is 0 → 100%. • 0% corresponds to $\frac{[\text{Max value}] + [\text{Min value}]}{2}$ if the range is -100% → + 100%. • 100% corresponds to [Max value].	0 to 100%	0%
AI4S	**[AI4 Interm.point Y]** Output delinearization point coordinate (frequency reference).	0 to 100%	0%

Buy: www.ValinOnline.com | Phone 844-385-3099 | Email: CustomerService@valin.com

Code	Name/Description	Adjustment range	Factory setting
AUI-	**[VIRTUAL AI1]**		
AIC1	**[AI net. channel]**		[No] (nO)

Virtual input.
This parameter can also be accessed in the [PID REGULATOR] (PId-)submenu page 170.

nO **[No]** (nO): Not assigned (in this case, the virtual input does not appear in the analog input assignment parameters for the functions)

Mdb ☐ **[Modbus]** (Mdb): Integrated Modbus

CAn ☐ **[CANopen]** (CAn): Integrated CANopen

nEt ☐ **[Com. card]** (nEt): Communication card (if inserted)

APP ☐ **[C.Insid. card]** (APP): Not applicable

Scale: the value 8192 transmitted by this input is equivalent to 10 V on a 10 V input.

WARNING

UNINTENDED EQUIPMENT OPERATION

If the equipment switches to forced local mode (see page 234), the virtual input remains fixed at the last value transmitted.
Do not use the virtual input and forced local mode in the same configuration.
Failure to follow these instructions can result in death or serious injury.

Buy: www.ValinOnline.com | Phone 844-385-3099 | Email: CustomerService@valin.com

Code	Name/Description	Adjustment range	Factory setting
PLI-	**[RP CONFIGURATION]** Can be accessed if a MT-VW3A3202 option card has been inserted		
PIA	**[RP assignment]** Read-only parameter, cannot be configured. It displays all the functions associated with the Pulse In input in order to check, for example, for compatibility problems.		
PIL	**[RP min value]** Frequency corresponding to the minimum speed	- 30.00 to 30.00 kHz	0
PFr	**[RP max value]** Frequency corresponding to the maximum speed	0 to 30.00 kHz	30.00 kHz
PFI	**[RP filter]** Interference filtering.	0 to 1000 ms	0

Buy: www.ValinOnline.com | Phone 844-385-3099 | Email: CustomerService@valin.com

Configuration of the encoder input serving as a reference with a frequency generator

This reference is not assigned, therefore the directions of operation must be given via the control channel (logic inputs, for example).

Minimum and maximum values (input values):

The minimum value corresponds to a minimum reference of 0% and the maximum value to a maximum reference of 100%. The minimum value may be greater than the maximum value. It may also be negative.

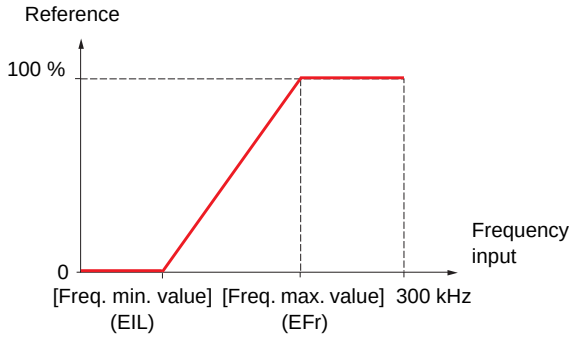

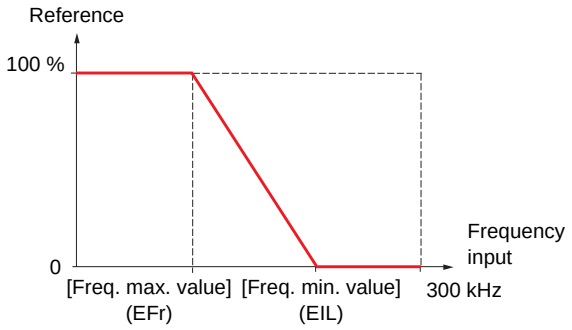

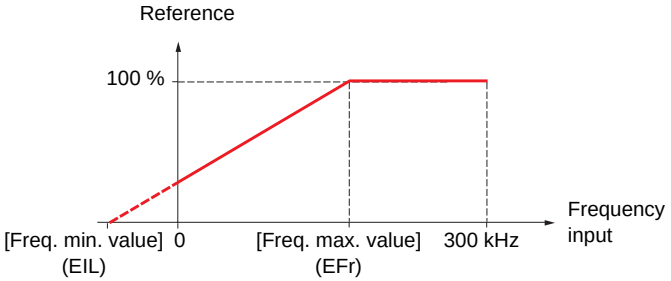

A reference can be obtained at zero frequency by assigning a negative value to the minimum value.

Buy: www.ValinOnline.com | Phone 844-385-3099 | Email: CustomerService@valin.com

The encoder configuration can also be accessed in the [1.4 MOTOR CONTROL] (drC-) menu.

Code	Name/Description	Adjustment range	Factory setting
IEn-	**[ENCODER CONFIGURATION]** The encoder parameters can only be accessed if the encoder card has been inserted. The available selections will depend on the type of encoder card used.		
EnS	**[Encoder type]** The parameter can be accessed if an encoder card has been inserted. To be configured in accordance with the type of encoder used. nO **[----]** (nO): Card missing. AAbb **[AABB]** (AAbb): For signals A, A-, B, B-. Ab **[AB]** (Ab): For signals A and B. A **[A]** (A) : For signal A. Value cannot be accessed if [Encoder usage] (EnU) page 96 = [Spd fdk reg.] (rEG).	[AABB] (AAbb)	
EnC	**[Encoder check]** Checks the encoder feedback. See procedure page 74. The parameter can be accessed if an encoder card has been inserted and if [Encoder usage] (EnU) page 96 is not [Speed ref.] (PGr). nO **[Not done]** (nO): Check not performed. YES **[Yes]** (YES): Activates monitoring of the encoder. dOnE **[Done]** (dOnE): Check performed successfully. The check procedure checks: - The direction of rotation of the encoder/motor - The presence of signals (wiring continuity) - The number of pulses/revolution If a fault is detected, the drive locks in [Encoder fault] (EnF) fault mode.	[Not done] (nO)	

Buy: www.ValinOnline.com | Phone 844-385-3099 | Email: CustomerService@valin.com

Code	Name/Description	Adjustment range	Factory setting
	[ENCODER CONFIGURATION] (continued)		
EnU	**[Encoder usage]** The parameter can be accessed if an encoder card has been inserted. nO **[No]** (nO): Function inactive. In this case, the other parameters cannot be accessed. SEC **[Fdbk monit.]** (SEC): The encoder provides speed feedback for monitoring only. rEG **[Spd fdk reg.]** (rEG): The encoder provides speed feedback for regulation and monitoring. This configuration is automatic if the drive has been configured for closed-loop operation, and is only possible in this case. PGr **[Speed ref.]** (PGr): The encoder provides a reference.		[No] (nO)
PGI	**[Number of pulses]** Number of pulses per encoder revolution. The parameter can be accessed if an encoder card has been inserted.	100 to 5000	1024
PGA	**[Reference type]** The parameter can be accessed if [Encoder usage] (EnU) = [Speed ref.] (PGr). EnC **[Encoder]** (EnC) : Use of an encoder. PtG **[Freq. gen.]** (PtG): Use of a frequency generator (unsigned reference).		[Encoder] (EnC)
EIL	**[Freq. min. value]** The parameter can be accessed if [Encoder usage] (EnU) = [Speed ref.] (PGr) and if [Reference type] (PGA) = [Freq. gen.] (PtG). Frequency corresponding to the minimum speed	- 300 to 300 kHz	0
EFr	**[Freq. max value]** The parameter can be accessed if [Encoder usage] (EnU) = [Speed ref.] (PGr) and if [Reference type] (PGA) = [Freq. gen.] (PtG). Frequency corresponding to the maximum speed	0.00 to 300 kHz	300 kHz
EFI	**[Freq. signal filter]** The parameter can be accessed if [Encoder usage] (EnU) = [Speed ref.] (PGr). Interference filtering.	0 to 1000 ms	0

Buy: www.ValinOnline.com | Phone 844-385-3099 | Email: CustomerService@valin.com

Code	Name/Description	Adjustment range	Factory setting
r1-	**[R1 CONFIGURATION]**		
r1	**[R1 Assignment]**		[No drive flt] (FLt)
nO	☐ **[No]** (nO): **Not assigned**		
FLt	☐ **[No drive flt]** (FLt): Drive not faulty (relay normally energized, and de-energized if there is a fault)		
rUn	☐ **[Drv running]** (rUn): Drive running		
FtA	☐ **[Freq. Th. attain.]** (FtA): Frequency threshold attained ([Freq. threshold] (Ftd) page 62)		
FLA	☐ **[HSP attain.]** (FLA): High speed attained		
CtA	☐ **[I attained]** (CtA): Current threshold attained ([Current threshold] (Ctd) page 61)		
SrA	☐ **[Freq.ref.att]** (SrA): Frequency reference attained		
tSA	☐ **[Th.mot. att.]** (tSA): Motor 1 thermal state attained		
PEE	☐ **[PID error al]** (PEE): PID error alarm		
PFA	☐ **[PID fdbk al]** (PFA): PID feedback alarm		
AP2	☐ **[AI2 AI. 4-20]** (AP2): Alarm indicating absence of 4-20 mA signal on input A12		
F2A	☐ **[Freq. Th 2 attain.]** (F2A): Frequency threshold 2 attained ([Freq. threshold 2] (F2d) page 62)		
tAd	☐ **[Th. drv. att.]** (tAd): Drive thermal state attained		
rSdA	☐ **[Rope slack]** (rSdA): Rope slack (see [Rope slack config.] parameter (rSd) page 165)		
ttHA	☐ **[High tq. att.]** (ttHA): Motor torque overshooting high threshold[High torque thd.] (ttH) page 61.		
ttLA	☐ **[Low tq. att.]** (ttLA): Motor torque undershooting low threshold[Low torque thd.] (ttL) page 61.		
MFrd	☐ **[Forward]** (MFrd): Motor in forward rotation		
MrrS	☐ **[Reverse]** (MrrS): Motor in reverse rotation		
tS2	☐ **[Th.mot2 att]** (tS2): Motor 2 thermal state attained		
tS3	☐ **[Th.mot3 att]** (tS3): Motor 3 thermal state attained		
AtS	☐ **[Neg Torque]** (AtS): Negative torque (braking)		
CnF0	☐ **[Cnfg.0 act.]** (CnF0): Configuration 0 active		
CnF1	☐ **[Cnfg.1 act.]** (CnF1): Configuration 1 active		
CnF2	☐ **[Cnfg.2 act.]** (CnF2): Configuration 2 active		
CFP1	☐ **[Set 1 active]** (CFP1): Parameter set 1 active		
CFP2	☐ **[Set 2 active]** (CFP2): Parameter set 2 active		
CFP3	☐ **[Set 3 active]** (CFP3): Parameter set 3 active		
dbL	☐ **[DC charged]** (dbL): DC bus charging		
brS	☐ **[In braking]** (brS): Drive braking		
PrM	☐ **[P. removed]** (PRM): Drive locked by "Power removal" input		
FqLA	☐ **[Fr.met. alar.]** (FqLA): Measured speed threshold attained: [Pulse warning thd.] (FqL) page 62.		
MCP	☐ **[I present]** (MCP): Motor current present		
LSA	☐ **[Limit sw. att]** (LSA): Limit switch attained		
dLdA	☐ **[Load alarm]** (dLdA): Load variation detection (see page 227).		
AG1	☐ **[Alarm Grp 1]** (AGI): Alarm group 1		
AG2	☐ **[Alarm Grp 2]** (AG2): Alarm group 2		
AG3	☐ **[Alarm Grp 3]** (AG3): Alarm group 3		
P1A	☐ **[PTC1 alarm]** (P1A): Probe alarm 1		
P2A	☐ **[PTC2 alarm]** (P2A): Probe alarm 2		
PLA	☐ **[LI6=PTC al.]** (PLA): LI6 = PTC probe alarm		
EFA	☐ **[Ext. fault al]** (EFA): External fault alarm		
USA	☐ **[Under V. al.]** (USA): Undervoltage alarm		
UPA	☐ **[Uvolt warn]** (UPA): Undervoltage warning		
AnA	☐ **[slipping al.]** (AnA): Slipping alarm		
tHA	☐ **[AI. °C drv]** (tHA): Drive overheating		
bSA	☐ **[Load mvt al]** (bSA): Braking speed alarm		
bCA	☐ **[Brk cont. al]** (bCA): Brake contact alarm		
SSA	☐ **[Lim T/I att.]** (SSA): Torque limit alarm		
rtA	☐ **[Trq. ctrl. al.]** (rtA): Torque control alarm		
tJA	☐ **[IGBT al.]** (tJA): IGBT alarm		
bOA	☐ **[Brake R. al.]** (bOA): Braking resistor temperature alarm		
APA	☐ **[Option al.]** (APA): Not aplicable.		
AP3	☐ **[AI3 AI. 4-20]** (AP3): Alarm indicating absence of 4-20 mA signal on input AI3		
AP4	☐ **[AI4 AI. 4-20]** (AP4): Alarm indicating absence of 4-20 mA signal on input AI4		
rdY	☐ **[Ready]** (rdY): Drive ready		

Buy: www.ValinOnline.com | Phone 844-385-3099 | Email: CustomerService@valin.com

Code	Name/Description	Adjustment range	Factory setting
	[R1 CONFIGURATION] (continued)		
r1d	**[R1 Delay time]**	0 to 9999 ms	0
	The change in state only takes effect once the configured time has elapsed, when the information becomes true. The delay cannot be set for the [No drive flt] (FLt) assignment, and remains at 0.		
r1S	**[R1 Active at]**		[1] (POS)
POS nEG	Configuration of the operating logic: ☐ **[1]** (POS): State 1 when the information is true ☐ **[0]** (nEG): State 0 when the information is true Configuration [1] (POS) cannot be modified for the [No drive flt] (FLt), assignment.		
r1H	**[R1 Holding time]**	0 to 9999 ms	0
	The change in state only takes effect once the configured time has elapsed, when the information becomes false. The holding time cannot be set for the [No drive flt] (FLt) assignment, and remains at 0.		
r2-	**[R2 CONFIGURATION]**		
r2	**[R2 Assignment]**		[No] (nO)
bLC LLC OCC EbO tSY dCO	Identical to R1 (see page 97) with the addition of (shown for information only as these selections can only be configured in the [1.7 APPLICATION FUNCT.] (Fun-)) menu: ☐ **[Brk control]** (bLC): Brake contactor control ☐ **[Input cont.]** (LLC): Line contactor control ☐ **[Output cont]** (OCC): Output contactor control ☐ **[End reel]** (EbO): End of reel(traverse control function) ☐ **[Sync. wobble]** (tSY): "Counter wobble" synchronization ☐ **[DC charging]** (dCO): DC bus precharging contactor control.		
r2d	**[R2 Delay time]**	0 to 9999 ms	0
	The delay cannot be set for the [No drive flt] (FLt), [Brk control] (bLC), [Output cont.] (OCC), [DC charging] (dCO), and [Input cont.] (LLC) assignments, and remains at 0. The change in state only takes effect once the configured time has elapsed, when the information becomes true.		
r2S	**[R2 Active at]**		[1] (POS)
POS nEG	Configuration of the operating logic: ☐ **[1]** (POS): State 1 when the information is true ☐ **[0]** (nEG): State 0 when the information is true The configuration [1] (POS) cannot be modified for the [No drive flt] (FLt), [Brk control] (bLC), [DC charging] (dCO), and [Input cont.] (LLC) assignments.		
r2H	**[R2 Holding time]**	0 to 9999 ms	0
	The holding time cannot be set for the [No drive flt] (FLt), [Brk control] (bLC), [DC charging] (dCO), and [Input cont] (LLC) assignments, and remains at 0. The change in state only takes effect once the configured time has elapsed, when the information becomes false.		

Buy: www.ValinOnline.com | Phone 844-385-3099 | Email: CustomerService@valin.com

Code	Name/Description	Adjustment range	Factory setting
r3-	**[R3 CONFIGURATION]** Can be accessed if a MT-VW3A3201 option card has been inserted		
r3	**[R3 Assignment]** Identical to R2		[No] (nO)
r3d	**[R3 Delay time]** The delay cannot be set for the [No drive flt] (FLt), [Brk control] (bLC), [Output cont.] (OCC), [DC charging] (dCO), and [Input cont.] (LLC) assignments, and remains at 0. The change in state only takes effect once the configured time has elapsed, when the information becomes true.	0 to 9999 ms	0
r3S POS nEG	**[R3 Active at]** Configuration of the operating logic: ☐ **[1]** (POS): State 1 when the information is true ☐ **[0]** (nEG): State 0 when the information is true The configuration [1] (POS) cannot be modified for the [No drive flt] (FLt), [Brk control] (bLC), [DC charging] (dCO), and [Input cont.] (LLC) assignments.		[1] (POS)
r3H	**[R3 Holding time]** The holding time cannot be set for the [No drive flt] (FLt), [Brk control] (bLC), [DC charging] (dCO), and [Input cont] (LLC) assignments, and remains at 0. The change in state only takes effect once the configured time has elapsed, when the information becomes false.	0 to 9999 ms	0
r4-	**[R4 CONFIGURATION]** Can be accessed if a MT-VW3A3202 option card has been inserted		
r4	**[R4 Assignment]** Identical to R2 (see page 98)		[No] (nO)
r4d	**[R4 Delay time]** The delay cannot be set for the [No drive flt] (FLt), [Brk control] (bLC), [Output cont.] (OCC), [DC charging] (dCO), and [Input cont.] (LLC) assignments, and remains at 0. The change in state only takes effect once the configured time has elapsed, when the information becomes true.	0 to 9999 ms	0
r4S POS nEG	**[R4 Active at]** Configuration of the operating logic: ☐ **[1]** (POS): State 1 when the information is true ☐ **[0]** (nEG): State 0 when the information is true The configuration [1] (POS) cannot be modified for the [No drive flt] (FLt), [Brk control] (bLC), [DC charging] (dCO), and [Input cont.] (LLC) assignments.		[1] (POS)
r4H	**[R4 Holding time]** The holding time cannot be set for the [No drive flt] (FLt), [Brk control] (bLC), [DC charging] (dCO), and [Input cont] (LLC) assignments, and remains at 0. The change in state only takes effect once the configured time has elapsed, when the information becomes false.	0 to 9999 ms	0

Buy: www.ValinOnline.com | Phone 844-385-3099 | Email: CustomerService@valin.com

Code	Name/Description	Adjustment range	Factory setting
LO1-	**[LO1 CONFIGURATION]** Can be accessed if a MT-VW3A3201 option card has been inserted		
LO1	**[LO1 assignment]** Identical to R1 (see page 97) with the addition of (shown for information only as these selections can only be configured in the [1.7 APPLICATION FUNCT.] (Fun-)) menu: bLC **[Brk control]** (bLC): Brake contactor control LLC **[Input cont.]** (LLC): Line contactor control OCC **[Output cont]** (OCC): Output contactor control EbO **[End reel]** (EbO): End of reel(traverse control function) tSY **[Sync. wobble]** (tSY): "Counter wobble" synchronization dCO **[DC charging]** (dCO): DC bus precharging contactor control.		[No] (nO)
LO1d	**[LO1 delay time]** The delay cannot be set for the [No drive flt] (FLt), [Brk control] (bLC), [Output cont.] (OCC), [DC charging] (dCO), and [Input cont.] (LLC) assignments, and remains at 0. The change in state only takes effect once the configured time has elapsed, when the information becomes true.	0 to 9999 ms	0
LO1S	**[LO1 active at]** Configuration of the operating logic: POS **[1]** (POS): State 1 when the information is true nEG **[0]** (nEG): State 0 when the information is true The configuration [1] (POS) cannot be modified for the [No drive flt] (FLt), [Brk control] (bLC), [DC charging] (dCO), and [Input cont.] (LLC) assignments.		[1] (POS)
LO1H	**[LO1 holding time]** The holding time cannot be set for the [No drive flt] (FLt), [Brk control] (bLC), [DC charging] (dCO), and [Input cont] (LLC) assignments, and remains at 0. The change in state only takes effect once the configured time has elapsed, when the information becomes false.	0 to 9999 ms	0
LO2-	**[LO2 CONFIGURATION]** Can be accessed if a MT-VW3A3201 option card has been inserted		
LO2	**[LO2 assignment]** Identical to LO1.		[No] (nO)
LO2d	**[LO2 delay time]** The delay cannot be set for the [No drive flt] (FLt), [Brk control] (bLC), [Output cont.] (OCC), [DC charging] (dCO), and [Input cont.] (LLC) assignments, and remains at 0. The change in state only takes effect once the configured time has elapsed, when the information becomes true.	0 to 9999 ms	0
LO2S	**[LO2 active at]** Configuration of the operating logic: POS **[1]** (POS): State 1 when the information is true nEG **[0]** (nEG): State 0 when the information is true The configuration [1] (POS) cannot be modified for the [No drive flt] (FLt), [Brk control] (bLC), [DC charging] (dCO), and [Input cont.] (LLC) assignments.		[1] (POS)
LO2H	**[LO2 holding time]** The holding time cannot be set for the [No drive flt] (FLt), [Brk control] (bLC), [DC charging] (dCO), and [Input cont] (LLC) assignments, and remains at 0. The change in state only takes effect once the configured time has elapsed, when the information becomes false.	0 to 9999 ms	0

Buy: www.ValinOnline.com | Phone 844-385-3099 | Email: CustomerService@valin.com

Code	Name/Description	Adjustment range	Factory setting
LO3-	**[LO3 CONFIGURATION]** Can be accessed if a MT-VW3A3202 option card has been inserted		
LO3	**[LO3 assignment]** Identical to LO1 (see page 100).		[No] (nO)
LO3d	**[LO3 delay time]** The delay cannot be set for the [No drive flt] (FLt), [Brk control] (bLC), [Output cont.] (OCC), [DC charging] (dCO), and [Input cont.] (LLC) assignments, and remains at 0. The change in state only takes effect once the configured time has elapsed, when the information becomes true.	0 to 9999 ms	0
LO3S POS nEG	**[LO3 active at]** Configuration of the operating logic: ☐ **[1]** (POS): State 1 when the information is true ☐ **[0]** (nEG): State 0 when the information is true The configuration [1] (POS) cannot be modified for the [No drive flt] (FLt), [Brk control] (bLC), [DC charging] (dCO), and [Input cont.] (LLC) assignments.		[1] (POS)
LO3H	**[LO3 holding time]** The holding time cannot be set for the [No drive flt] (FLt), [Brk control] (bLC), [DC charging] (dCO), and [Input cont] (LLC) assignments, and remains at 0. The change in state only takes effect once the configured time has elapsed, when the information becomes false.	0 to 9999 ms	0
LO4-	**[LO4 CONFIGURATION]** Can be accessed if a MT-VW3A3202 option card has been inserted		
LO4	**[LO4 assignment]** Identical to LO1 (see page 100).		[No] (nO)
LO4d	**[LO4 delay time]** The delay cannot be set for the [No drive flt] (FLt), [Brk control] (bLC), [Output cont.] (OCC), [DC charging] (dCO), and [Input cont.] (LLC) assignments, and remains at 0. The change in state only takes effect once the configured time has elapsed, when the information becomes true.	0 to 9999 ms	0
LO4S POS nEG	**[LO4 active at]** Configuration of the operating logic: ☐ **[1]** (POS): State 1 when the information is true ☐ **[0]** (nEG): State 0 when the information is true The configuration [1] (POS) cannot be modified for the [No drive flt] (FLt), [Brk control] (bLC), [DC charging] (dCO), and [Input cont.] (LLC) assignments.		[1] (POS)
LO4H	**[LO4 holding time]** The holding time cannot be set for the [No drive flt] (FLt), [Brk control] (bLC), [DC charging] (dCO), and [Input cont] (LLC) assignments, and remains at 0. The change in state only takes effect once the configured time has elapsed, when the information becomes false.	0 to 9999 ms	0

Buy: www.ValinOnline.com | Phone 844-385-3099 | Email: CustomerService@valin.com

Use of analog output AO1 as a logic output

Analog output AO1 can be used as a logic output, by assigning DO1. In this case, when set to 0 this output corresponds to the AO1 min. value (0 V or 0 mA, for example), and when set to 1 to the AO1 max. value (10 V or 20 mA, for example).
The electrical characteristics of this analog output remain unchanged. As these differ from logic output characteristics, it is important to ensure that they are compatible with the intended application.

Code	Name/Description	Adjustment range	Factory setting
dO1-	**[DO1 CONFIGURATION]**		
dO1	**[DO1 assignment]** Identical to R1 (see page 97) with the addition of (shown for information only as these selections can only be configured in the [1.7 APPLICATION FUNCT.] (Fun-)) menu: bLC **[Brk control]** (bLC): Brake contactor control LLC **[Input cont.]** (LLC): Line contactor control OCC **[Output cont]** (OCC): Output contactor control EbO **[End reel]** (EbO): End of reel(traverse control function) tSY **[Sync. wobble]** (tSY): "Counter wobble" synchronization dCO **[DC charging]** (dCO): DC bus precharging contactor control.		[No] (nO)
dO1d	**[DO1 delay time]** The delay cannot be set for the [No drive flt] (FLt), [Brk control] (bLC), [Output cont.] (OCC), [DC charging] (dCO), and [Input cont.] (LLC) assignments, and remains at 0. The change in state only takes effect once the configured time has elapsed, when the information becomes true.	0 to 9999 ms	0
dO1S	**[DO1 active at]** Configuration of the operating logic: POS **[1]** (POS): State 1 when the information is true nEG **[0]** (nEG): State 0 when the information is true The configuration [1] (POS) cannot be modified for the [No drive flt] (FLt), [Brk control] (bLC), [DC charging] (dCO), and [Input cont.] (LLC) assignments.		[1] (POS)
dO1H	**[DO1 holding time]** The holding time cannot be set for the [No drive flt] (FLt), [Brk control] (bLC), [DC charging] (dCO), and [Input cont] (LLC) assignments, and remains at 0. The change in state only takes effect once the configured time has elapsed, when the information becomes false.	0 to 9999 ms	0

Buy: www.ValinOnline.com | Phone 844-385-3099 | Email: CustomerService@valin.com

Configuration of analog outputs

Minimum and maximum values (output values):

The minimum output value, in volts or mA, corresponds to the lower limit of the assigned parameter and the maximum value corresponds to its upper limit. The minimum value may be greater than the maximum value:

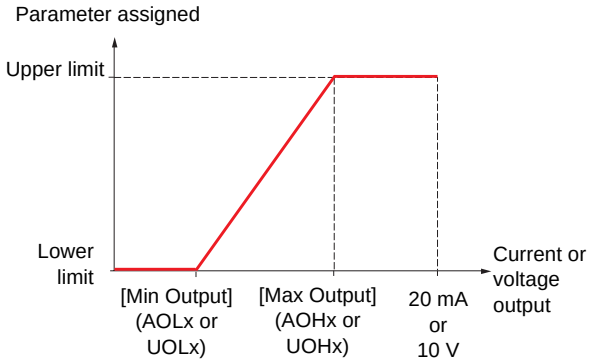

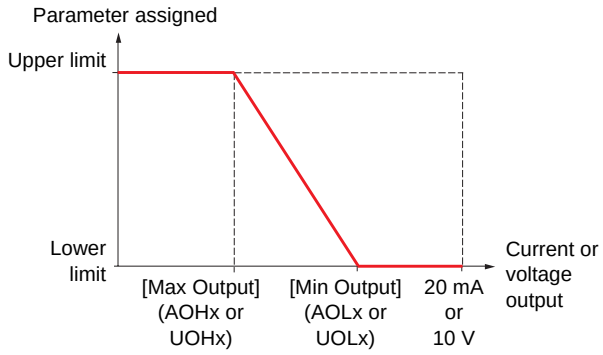

Outputs AO2 and AO3 configured as bipolar outputs (strongly recommended for signed parameters):

The [min Output] (UOLx) and [max Output] (UOHx) parameters are absolute values, although they function symmetrically. In the case of bipolar outputs, always set the maximum value higher than the minimum value.
The [max Output] (UOHx) corresponds to the upper limit of the assigned parameter, and the [min Output] (UOLx) corresponds to an average value between the upper and lower limits (0 for a signed and symmetrical parameter such as in the example below).

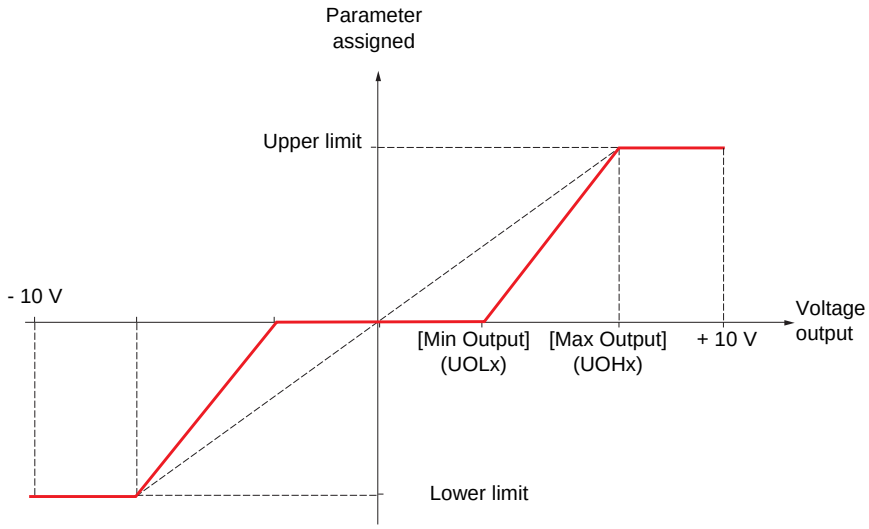

Buy: www.ValinOnline.com | Phone 844-385-3099 | Email: CustomerService@valin.com

Scaling of the assigned parameter

The scale of the assigned parameter can be adapted in accordance with requirements by modifying the values of the lower and upper limits by means of two parameters for each analog output.
These parameters are given in %; 100% corresponds to the total variation range of the configured parameter, so:

- 100% = upper limit - lower limit For example, [Sign. torque] (Stq) which varies between -3 and +3 times the rated torque, 100% corresponds to 6 times the rated torque.

- The parameter [Scaling AOx min] (ASLx) modifies the lower limit: new value = lower limit + (range x ASLx). The value 0% (factory setting) does not modify the lower limit.
- The parameter [Scaling AOx max] (ASHx) modifies the upper limit: new value = lower limit + (range x ASLx). The value 100% (factory setting) does not modify the upper limit.
- [Scaling AOx min] (ASLx) must always be lower than [Scaling AOx max] (ASHx).

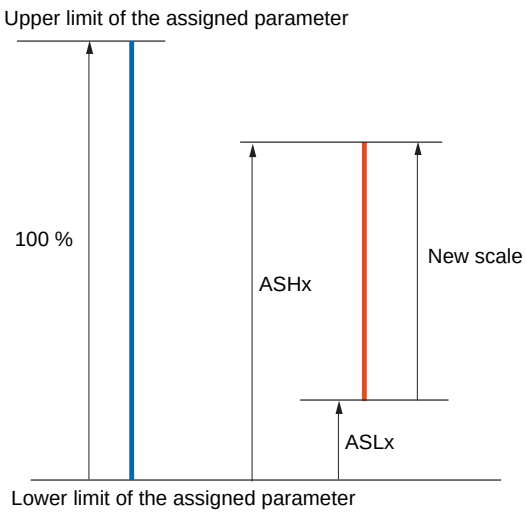

Application example 1

The value of the assigned motor torque at the AO2 output is to be transferred with +/- 10 V, with a range of -2 Tr to +2 Tr.

The parameter [Sign. torque.] (Stq) varies between -3 and +3 times the rated torque, or a range of 6 times the rated torque.

[Scaling AO2 min] (ASL2) must modify the lower limit by 1x the rated torque, or 100/6 = 16.7% (new value = lower limit + (range x ASL2).

[Scaling AO2 max] (ASH2) must modify the upper limit by 1x the rated torque, or 100 - 100/6 = 83.3 % (new value = lower limit + (range x ASH2).

Application example 2

The value of the motor current at the AO2 output is to be transferred with 0 - 20 mA, range 2 In motor, In motor being the equivalent of a 0.8 In drive.

The parameter [I motor] (OCr) varies between 0 and 2 times the rated drive current, or a range of 2.5 times the rated drive current.

[Scaling AO2 min] (ASL2) must not modify the lower limit, which therefore remains at its factory setting of 0%.

[Scaling AO2 max] (ASH2) must modify the upper limit by 0.5x the rated motor torque, or 100 - 100/5 = 80 % (new value = lower limit + (range x ASH2).

Buy: www.ValinOnline.com | Phone 844-385-3099 | Email: CustomerService@valin.com

Code	Name/Description	Adjustment range	Factory setting
AO1-	**[AO1 CONFIGURATION]**		
AO1	**[AO1 assignment]** ☐ **[No]** (nO): Not assigned ☐ **[I motor]** (OCr): Current in the motor, between 0 and 2 In (In = rated drive current indicated in the Installation Manual and on the drive nameplate). ☐ **[Motor freq.]** (OFr): Output frequency, from 0 to [Max frequency] (tFr) ☐ **[Ramp out.]** (OrP): From 0 to [Max frequency] (tFr) ☐ **[Motor torq.]** (trq): Motor torque, between 0 and 3 times the rated motor torque. ☐ **[Sign. torque]** (Stq): Signed motor torque, between -3 and +3 times the rated motor torque. The + sign corresponds to the motor mode (e.g. during acceleration,etc) and the - sign to the generator mode (braking,e.g during deceleration,etc). ☐ **[sign ramp]** (OrS) : Signed ramp output, between - [Max frequency] (tFr) and + [Max frequency] (tFr) ☐ **[PID ref.]** (OPS) : PID regulator reference between [Min PID reference] (PIP1) and [Max PID reference] (PIP2) ☐ **[PID feedback]** (OPF): PID regulator feedback between [Min PID feedback] (PIF1) and [Max PID feedback] (PIF2) ☐ **[PID error]** (OPE): PID regulator error between- 5 % and + 5 % of ([Max PID feedback] (PIF2) - [Min PID feedback] (PIF1)) ☐ **[PID Output]** (OPI) : PID regulator output between [Low speed] (LSP) and [High speed] (HSP) ☐ **[Mot. power]** (OPr): Motor power, between 0 and 2.5 times [Rated motor power] (nPr) ☐ **[Mot thermal]** (tHr): Motor thermal state, between 0 and 200% of the rated thermal state. ☐ **[Drv thermal]** (tHd): Drive thermal state, between 0 and 200% of the rated thermal state. ☐ **[Torque 4Q]** (tqMS) : Signed motor torque, between -3 and +3 times the rated motor torque. The + sign and the - sign correspond to the physical direction of the torque, regardless of mode (motor or generator). Example of usage: "master-slave" with the TORQUE CONTROL] (tOr-) function, page 176. ☐ **[Meas.mot.fr]** (OFrr): Measured motor speed. ☐ **[Sig. o/p frq.]** (OFS): Assigned output frequency, between - [Max frequency] (tFr) and + [Max frequency] (tFr) ☐ **[Mot therm2]** (tHr2): Motor thermal state 2, between 0 and 200 % of the rated thermal state. ☐ **[Mot therm3]** (tHr3): Motor thermal state 3, between 0 and 200% of the rated thermal state. ☐ **[Uns. TrqRef]** (Utr): Torque reference, between 0 and 3 times the rated motor torque ☐ **[Uns. TrqRef]** (Utr): Signed torque reference, between - 3 and + 3 times the rated motor torque ☐ **[Torque lim.]** (tqL): Torque limit, between 0 and 3 times the rated motor torque ☐ **[Motor volt.]** (UOP): Voltage applied to the motor, between 0 and [Rated motor volt.] (UnS) ☐ **[dO1]** (dO1): Assignment to a logic output. This assignment can only appear if [DO1 assignment] (dO1) page 102 has been assigned. This is the only possible choice in this case, and is only displayed for informational purposes.		[No] (nO)
AO1t	**[AO1 Type]** ☐ **[Voltage]** (10U): **Voltage output** ☐ **[Current]** (0A): Current output		[Current] (0A)
AOL1	**[AO1 min Output]** The parameter can be accessed if [AO1 Type] (AO1t) = [Current] (0A)	0 to 20.0 mA	0 mA
AOH1	**[AO1 max Output]** The parameter can be accessed if [AO1 Type] (AO1t) = [Current] (0A)	0 to 20.0 mA	20.0 mA
UOL1	**[AO1 min Output]** The parameter can be accessed if [AO1 Type] (AO1t) = [Voltage] (10U)	0 to 10.0 V	0 V
UOH1	**[AO1 max Output]** The parameter can be accessed if [AO1 Type] (AO1t) = [Voltage] (10U)	0 to 10.0 V	10.0 V

Buy: www.ValinOnline.com | Phone 844-385-3099 | Email: CustomerService@valin.com

Code	Name/Description	Adjustment range	Factory setting
AO1-	■ **[AO1 CONFIGURATION]** (continued)		
ASL1	❑ **[Scaling AO1 min]**	0 to 100.0 %	0 %
	Scaling of the lower limit of the assigned parameter, as a % of the maxiumum possible variation.		
ASH1	❑ **[Scaling AO1 max]**	0 to 100.0 %	100.0 %
	Scaling of the upper limit of the assigned parameter, as a % of the maxiumum possible variation.		
AO1F	❑ **[AO1 Filter]**	0 to 10.00 s	0 s
	Interference filtering. This parameter is forced to 0 if[AO1 asisgnment] (AO1) = [dO1] (dO1).		

Buy: www.ValinOnline.com | Phone 844-385-3099 | Email: CustomerService@valin.com

Code	Name/Description	Adjustment range	Factory setting
AO2-	**[AO2 CONFIGURATION]** Can be accessed if a MT-VW3A3202 option card has been inserted		
AO2	**[AO2 assignment]** Same assignments as AO1, without [dO1] (dO1).		[No] (nO)
AO2t 10U 0A n10U	**[AO2 Type]** **[Voltage]** (10U): **Voltage output** **[Current]** (0A): Current output **[Voltage +/-]** (n10U): Bipolar voltage output.		[Current] (0A)
AOL2	**[AO2 min Output]** The parameter can be accessed if [AO2 Type] (AO2t) = [Current] (0A)	0 to 20.0 mA	0 mA
AOH2	**[AO2 max Output]** The parameter can be accessed if [AO2 Type] (AO2t) = [Current] (0A)	0 to 20.0 mA	20.0 mA
UOL2	**[AO2 min Output]** The parameter can be accessed if [AO2 Type] (AO2t) = [Voltage] (10U) or [Voltage +/-] (n10U)	0 to 10.0 V	0 V
UOH2	**[AO2 max Output]** The parameter can be accessed if [AO2 Type] (AO2t) = [Voltage] (10U) or [Voltage +/-] (n10U)	0 to 10.0 V	10.0 V
ASL2	**[Scaling AO2 min]** Scaling of the lower limit of the assigned parameter, as a % of the maxiumum possible variation.	0 to 100.0 %	0 %
ASH2	**[Scaling AO2 max]** Scaling of the upper limit of the assigned parameter, as a % of the maxiumum possible variation.	0 to 100.0 %	100.0 %
AO2F	**[AO2 Filter]** Interference filtering.	0 to 10.00 s	0 s

Buy: www.ValinOnline.com | Phone 844-385-3099 | Email: CustomerService@valin.com

Code	Name/Description	Adjustment range	Factory setting
AO3-	**[AO3 CONFIGURATION]** Can be accessed if a MT-VW3A3202 option card has been inserted		
AO3	**[AO3 assignment]** Same assignments as AO1, without [dO1] (dO1).		[No] (nO)
AO3t 10U 0A n10U	**[AO3 Type]** ☐ **[Voltage]** (10U): **Voltage output** ☐ **[Current]** (0A): Current output ☐ **[Voltage +/-]** (n10U): Bipolar voltage output.		[Current] (0A)
AOL3	**[AO3 min Output]** The parameter can be accessed if [AO3 Type] (AO3t) = [Current] (0A)	0 to 20.0 mA	0 mA
AOH3	**[AO3 max Output]** The parameter can be accessed if [AO3 Type] (AO3t) = [Current] (0A)	0 to 20.0 mA	20.0 mA
UOL3	**[AO3 min Output]** The parameter can be accessed if [AO3 Type] (AO3t) = [Voltage] (10U) or [Voltage +/-] (n10U)	0 to 10.0 V	0 V
UOH3	**[AO3 max Output]** The parameter can be accessed if [AO3 Type] (AO3t) = [Voltage] (10U) or [Voltage +/-] (n10U)	0 to 10.0 V	10.0 V
ASL3	**[Scaling AO3 min]** Scaling of the lower limit of the assigned parameter, as a % of the maxiumum possible variation.	0 to 100.0 %	0 %
ASH3	**[Scaling AO3 max]** Scaling of the upper limit of the assigned parameter, as a % of the maxiumum possible variation.	0 to 100.0 %	100.0 %
AO3F	**[AO3 Filter]** Interference filtering.	0 to 10.00 s	0 s

Buy: www.ValinOnline.com | Phone 844-385-3099 | Email: CustomerService@valin.com

The following submenus group the alarms into 1 to 3 groups, each of which can be assigned to a relay or a logic output for remote signaling. These groups can also be displayed on the graphic display (see [6 MONITORING CONFIG.] menu) and viewed via the [1.2 MONITORING] (SUP) menu.
When one or a number of alarms selected in a group occurs, this alarm group is activated.

Code	Name/Description	Adjustment range	Factory setting
A1C-	**[ALARM GRP1 DEFINITION]**		
	Selection to be made from the following list:		
PLA	☐ **[LI6=PTC al.]** (PLA): LI6 = PTC probe alarm		
P1A	☐ **[PTC1 alarm]** (P1A): Probe alarm 1		
P2A	☐ **[PTC2 alarm]** (P2A): Probe alarm 2		
EFA	☐ **[Ext. fault al.]** (EFA): External fault alarm		
USA	☐ **[Under V. al.]** (USA): Undervoltage alarm		
AnA	☐ **[slipping al.]** (AnA): Slipping alarm		
CtA	☐ **[I attained]** (CtA): Current threshold attained ([Current threshold] (Ctd) page 61)		
FtA	☐ **[Freq.Th.att.]** (FtA): Frequency threshold attained ([Freq. threshold] (Ftd) page 62)		
F2A	☐ **[Freq. Th. 2 attain.]** (F2A): Frequency threshold 2 attained ([Freq. Th. 2 attain] (F2d) page 62)		
SrA	☐ **[Freq.ref.att]** (SrA): Frequency reference attained		
tSA	☐ **[Th.mot. att.]** (tSA): Motor 1 thermal state attained		
tS2	☐ **[Th.mot2 att]** (tS2): Motor 2 thermal state attained		
tS3	☐ **[Th.mot3 att]** (tS3) : Motor 3 thermal state attained		
UPA	☐ **[Uvolt warn]** (UPA): Undervoltage warning		
FLA	☐ **[HSP attain.]** (FLA): High speed attained		
tHA	☐ **[AI. °C drv]** (tHA): Drive overheating		
bSA	☐ **[Load mvt al]** (bSA): Braking speed alarm		
bCA	☐ **[Brk cont. al]** (bCA): Brake contact alarm		
PEE	☐ **[PID error al]** (PEE): PID error alarm		
PFA	☐ **[PID fdbk al.]** (PFA): PID feedback alarm		
AP2	☐ **[AI2 AI. 4-20]** (AP2): Alarm indicating absence of 4-20 mA signal on input A12		
AP3	☐ **[AI3 AI. 4-20]** (AP3): Alarm indicating absence of 4-20 mA signal on input AI3		
AP4	☐ **[AI4 AI. 4-20]** (AP4): Alarm indicating absence of 4-20 mA signal on input AI4		
SSA	☐ **[Lim T/I att.]** (SSA): Torque limit alarm		
tAd	☐ **[Th. drv. att.]** (tAd): Drive thermal state attained		
tJA	☐ **[IGBT alarm]** (tJA): IGBT alarm		
rtA	☐ **[Torque Control al.]** (rtA): Torque control alarm		
bOA	☐ **[Brake R. al.]** (bOA): Braking resistor temperature alarm		
APA	☐ **[Option al.]** (APA): Alarm generated by an option card.		
UrA	☐ **[Regen. underV. al.]** (UrA): Reserved.		
rSdA	☐ **[Rope slack alarm]** (rSdA) : Rope slack (see [Rope slack config.] (rSd) parameter page 165)		
ttHA	☐ **[High torque alarm]** (ttHA): Motor torque overshooting high threshold [High torque thd.] (ttH) page 61.		
ttLA	☐ **[Low torque alarm]** (ttLA) : Motor torque undershooting low threshold[Low torque thd.] (ttL) page 61.		
FqLA	☐ **[Freq. meter Alarm]** (FqLA) : Measured speed threshold attained: [Pulse warning thd.] (FqL) page 62.		
dLdA	☐ **[Dynamic load alarm]** (dLdA): Load variation detection (see[DYNAMIC LOAD DETECT.] (dLd-) page 227).		
	See the multiple selection procedure on page 26 for the integrated display , and page 17 for the graphic display.		
A2C-	**[ALARM GRP2 DEFINITION]**		
	Identical to [ALARM GRP1 DEFINITION] (A1C-)		
A3C-	**[ALARM GRP3 DEFINITION]**		
	Identical to [ALARM GRP1 DEFINITION] (A1C-)		

Buy: www.ValinOnline.com | Phone 844-385-3099 | Email: CustomerService@valin.com

Using graphic display keypad:

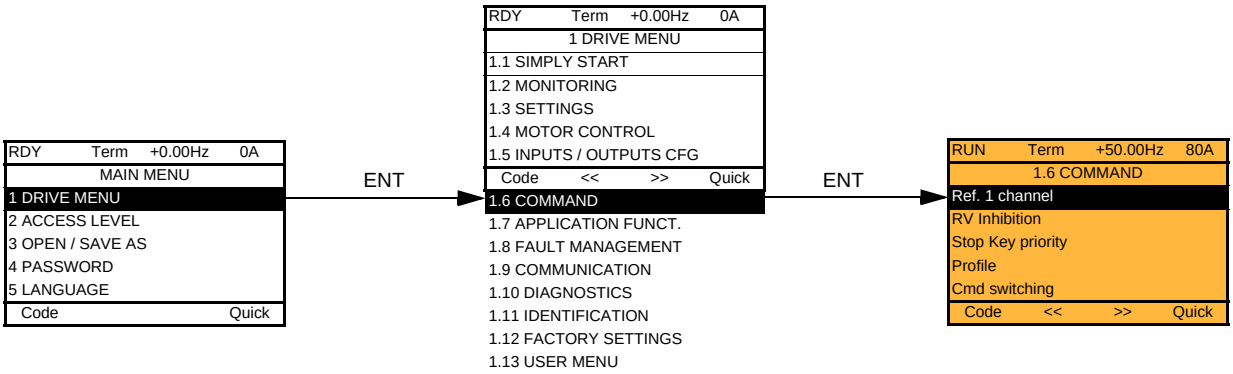

Using integrated display keypad:

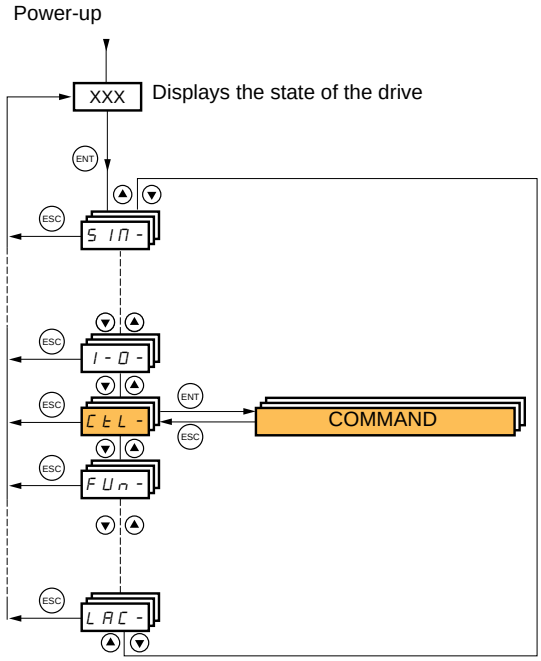

Buy: www.ValinOnline.com | Phone 844-385-3099 | Email: CustomerService@valin.com

[1.6 COMMAND] (CtL-)

The parameters in the [1.6 COMMAND] (CtL) menu can only be modified when the drive is stopped and no run command is present.

Command and reference channels

Run commands (forward, reverse, stop, etc.) and references can be sent using the following channels:

Control	Reference
• Terminals: logic inputs LI • Graphic display keypad • Integrated Modbus • Integrated CANopen • Communication card	• Terminals: analog inputs AI, frequency input, encoder • Graphic display keypad • Integrated Modbus • Integrated CANopen • Communication card • +/- speed via the terminals • +/- speed via the graphic display terminal

The behavior of the MT Series can be adapted according to requirements:

- [Not separ.] (SIM): Command and reference are sent via the same channel.
- [Separate] (SEP): Command and reference may be sent via different channels.

In these configurations, control via the communication bus is performed in accordance with the DRIVECOM standard with only 5 freely-assignable bits (see Communication Parameters Manual). The application functions cannot be accessed via the communication interface.

- [I/O profile] (IO): The command and the reference can come from different channels. This configuration both simplifies and extends use via the communication interface.
  Commands may be sent via the logic inputs on the terminals or via the communication bus.
  When commands are sent via a bus, they are available on a word, which acts as virtual terminals containing only logic inputs.
  Application functions can be assigned to the bits in this word. More than one function can be assigned to the same bit.

☞ **Note:** Stop commands from the terminals remain active even if the terminals are not the active command channel.

☞ **Note :** The integrated Modbus channel has 2 physical communication ports:
- The Modbus network port
- The Modbus HMI port

The drive does not differentiate between these two ports, but recognizes the graphic display keypad irrespective of the port to which it is connected.

Buy: www.ValinOnline.com | Phone 844-385-3099 | Email: CustomerService@valin.com

Reference channel for [Not separ.] (SIM), [Separate] (SEP) and [I/O profile] (IO) configurations, PID not configured

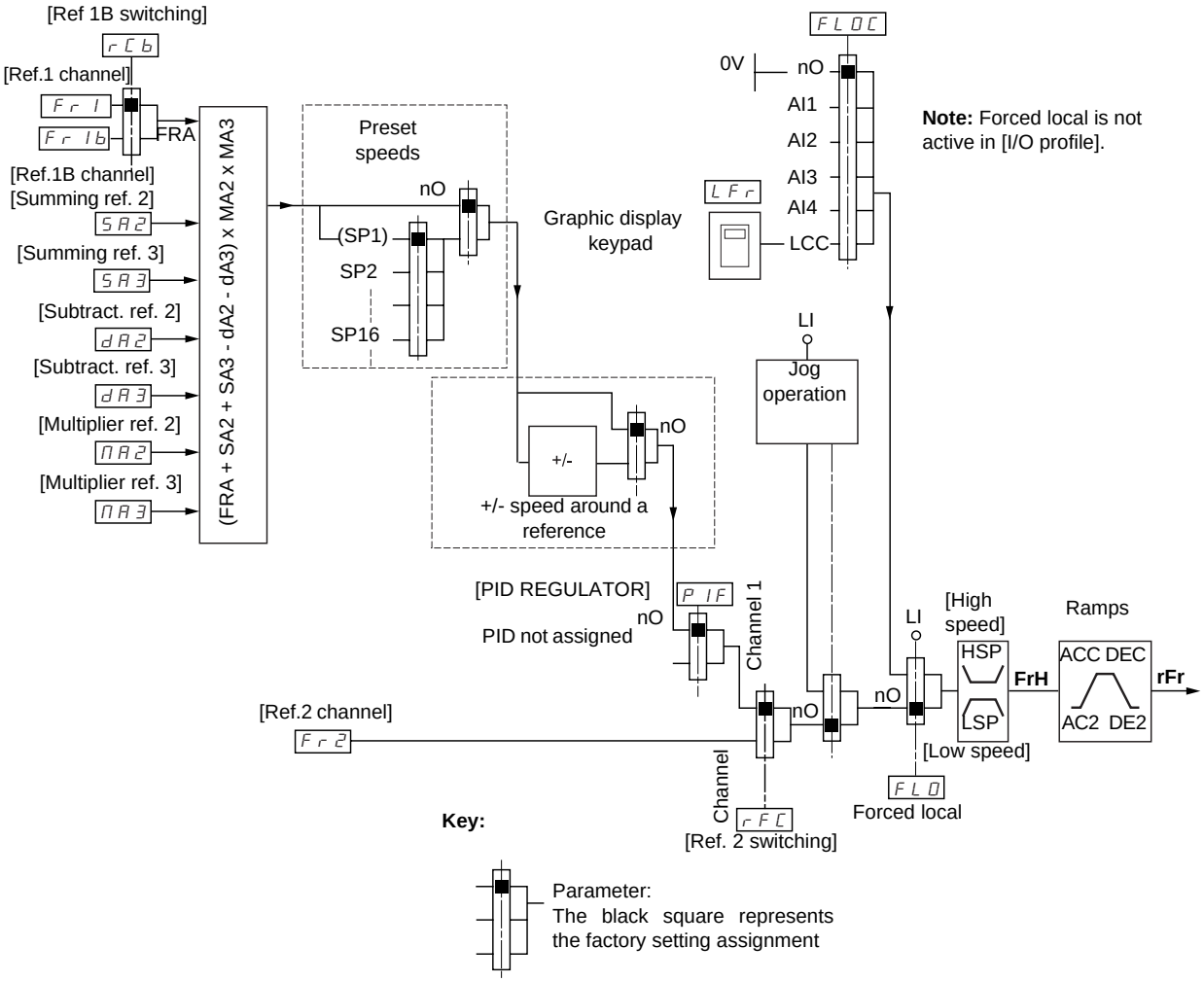

Instructions

Fr1, SA2, SA3, dA2, dA3, MA2, MA3:

- Terminals, graphic display keypad, integrated Modbus, integrated CANopen, communication card

Fr1b, for SEP and IO:

- Terminals, graphic display keypad, integrated Modbus, integrated CANopen, communication card

Fr1b, for SIM:

- Terminals, only accessible if Fr1 = terminals

Fr2:

- Terminals, graphic display keypad, integrated Modbus, integrated CANopen, communication card , **and +/- speed**

Note :[Ref.1B channel] (Fr1b) and [Ref 1B switching] (rCb) must be configured in the [1.7 APPLICATION FUNCT.] (Fun-) menu.

Buy: www.ValinOnline.com | Phone 844-385-3099 | Email: CustomerService@valin.com

Reference channel for [Not separ.] (SIM), [Separate] (SEP) and [I/O profile] (IO) configurations, PID configured with PID references at the terminals

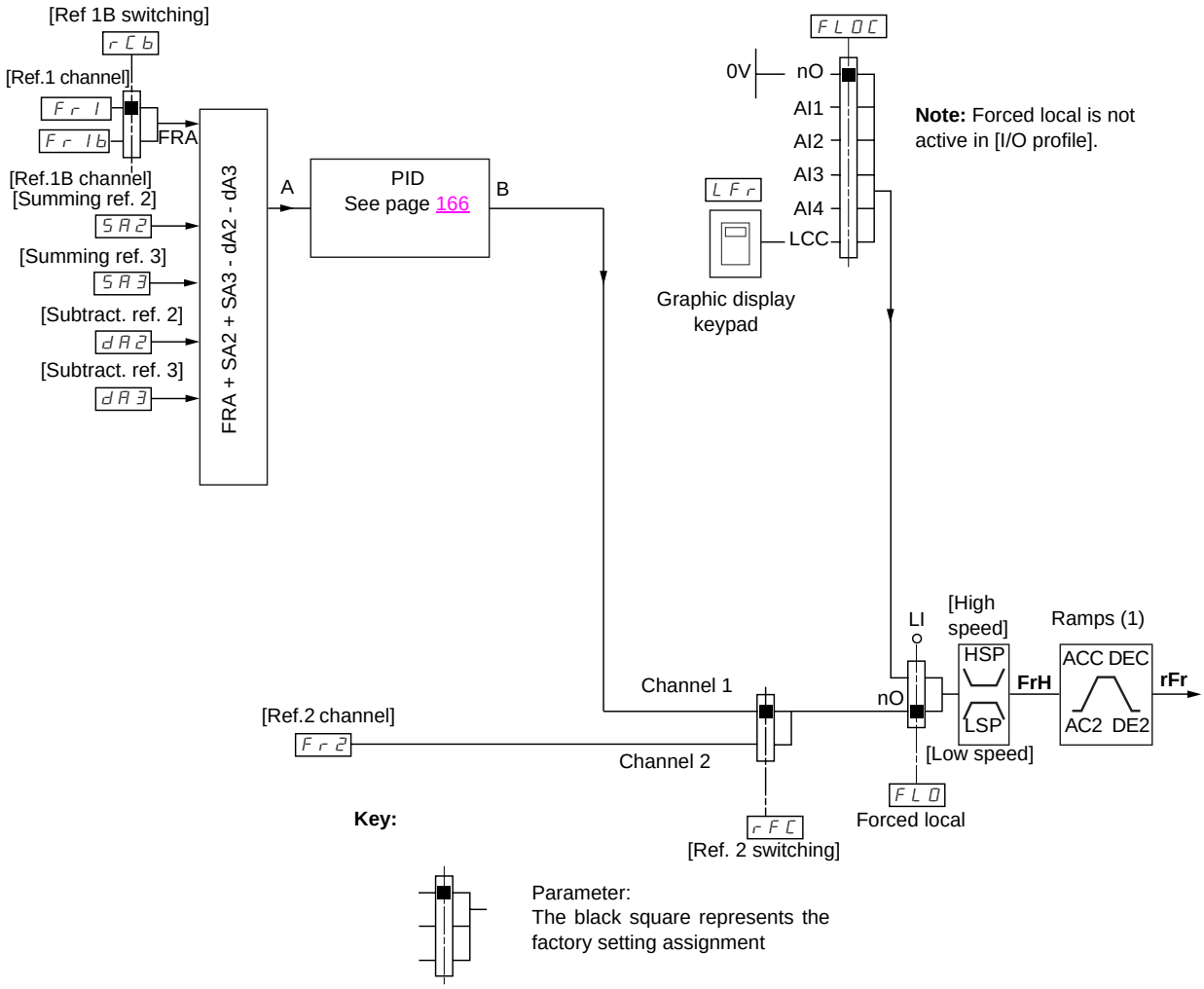

Instructions

Fr1:

- Terminals, graphic display keypad, integrated Modbus, integrated CANopen, communication card

Fr1b, for SEP and IO:

- Terminals, graphic display keypad, integrated Modbus, integrated CANopen, communication card

Fr1b, for SIM:

- Terminals, only accessible if Fr1 = terminals

SA2, SA3, dA2, dA3:

- Terminals only

Fr2:

- Terminals, graphic display keypad, integrated Modbus, integrated CANopen, communication card , **and +/- speed**

(1) Ramps not active if the PID function is active in automatic mode.

Note :[Ref.1B channel] (Fr1b) and [Ref 1B switching] (rCb) must be configured in the [1.7 APPLICATION FUNCT.] (Fun-) menu.

Buy: www.ValinOnline.com | Phone 844-385-3099 | Email: CustomerService@valin.com

Command channel for [Not separ.] (SIM) configuration

Reference and command, not separate

The command channel is determined by the reference channel. Parameters Fr1, Fr2, rFC, FLO and FLOC are common to reference and command.

Example: if the reference is Fr1 = AI1 (analog input at the terminals), control is via LI (logic input at the terminals).

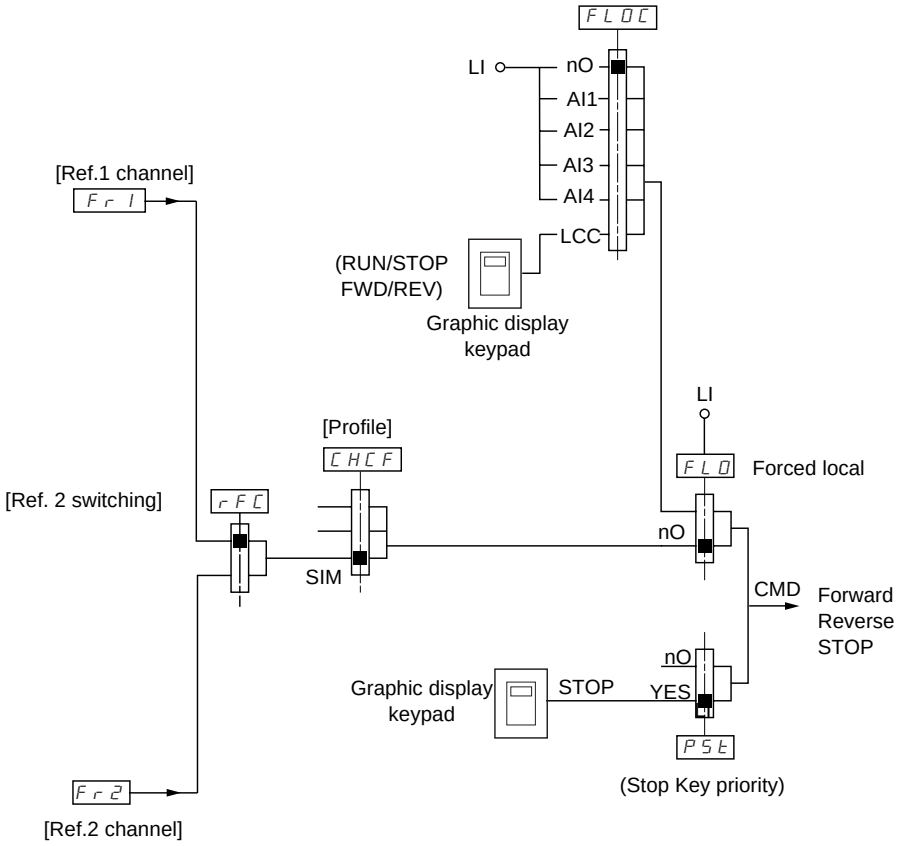

Key:

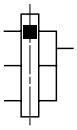

Parameter:
The black square represents
the factory setting assignment

Buy: www.ValinOnline.com | Phone 844-385-3099 | Email: CustomerService@valin.com

Command channel for [Separate] (SEP) configuration

Separate reference and command

Parameters FLO and FLOC are common to reference and command.

Example: If the reference is in forced local mode via AI1 (analog input at the terminals), command in forced local mode is via LI (logic input at the terminals).

The command channels Cd1 and Cd2 are independent of the reference channels Fr1, Fr1b and Fr2.

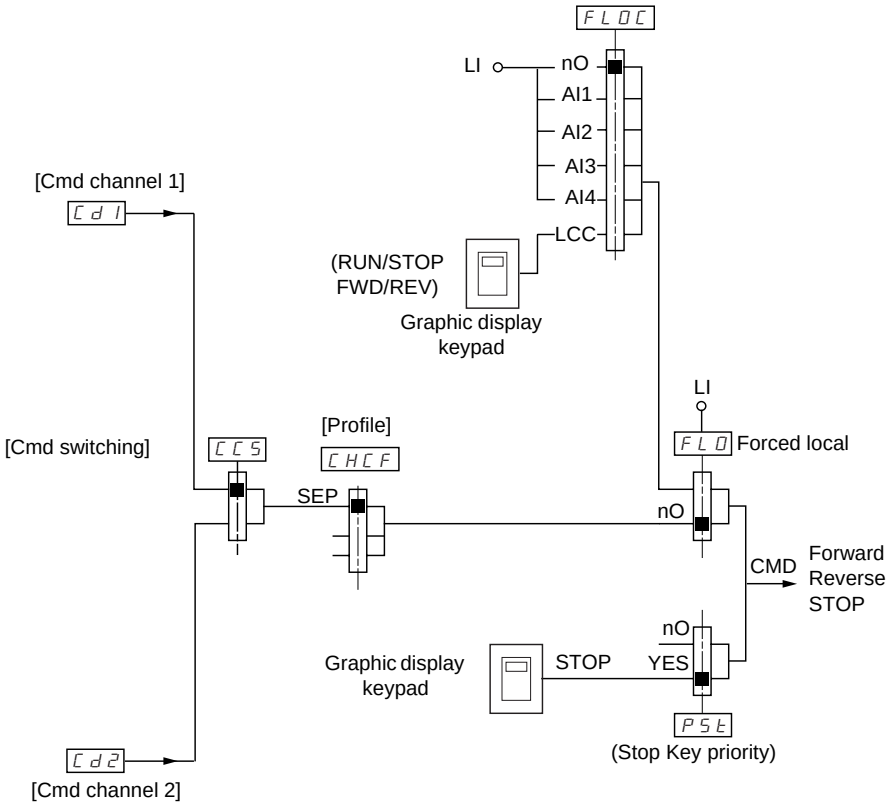

Key:

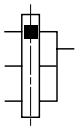

Parameter:
The black rectangle represents the factory setting assignment, except for [Profile].

Commands

Cd1, Cd2:

- Terminals, graphic display keypad, integrated Modbus, integrated CANopen, communication card.

Buy: www.ValinOnline.com | Phone 844-385-3099 | Email: CustomerService@valin.com

Command channel for [I/O profile] (IO) configuration

Separate reference and command, as in [Separate] (SEP) configuration

The command channels Cd1 and Cd2 are independent of the reference channels Fr1, Fr1b and Fr2.

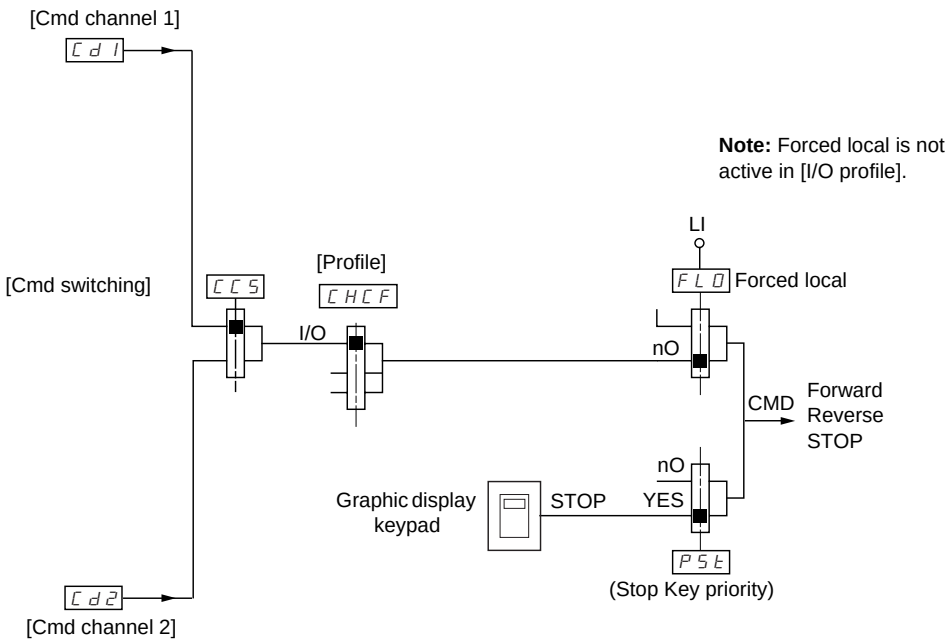

Key:

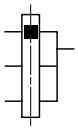

Parameter:
The black rectangle represents the factory setting assignment, except for [Profile].

Commands

Cd1, Cd2:

- Terminals, graphic display keypad, integrated Modbus, integrated CANopen, communication card.

Buy: www.ValinOnline.com | Phone 844-385-3099 | Email: CustomerService@valin.com

Command channel for [I/O profile] (IO) configuration

Selection of a command channel:

A command or an action can be assigned:

- To a fixed channel by selecting an LI input or a Cxxx bit:
  - By selecting e.g., LI3, this action will always be triggered by LI3 regardless of which command channel is switched.
  - By selecting e.g., C214, this action will always be triggered by integrated CANopen with bit 14 regardless of which command channel is switched.

- To a switchable channel by selecting a CDxx bit:
  - By selecting, e.g., CD11, this action will be triggered by
    LI12 if the terminals channel is active
    C111 if the integrated Modbus channel is active
    C211 if the integrated CANopen channel is active
    C311 if the communication card channel is active

If the active channel is the graphic display keypad, the functions and commands assigned to CDxx switchable internal bits are inactive.

Note:

- CD14 and CD15 can only be used for switching between 2 networks. They do not have equivalent logic inputs.

Terminals	Integrated Modbus	Integrated CANopen	Communication card	Internal bit, can be switched
				CD00
LI2 (1)	C101 (1)	C201 (1)	C301 (1)	CD01
LI3	C102	C202	C302	CD02
LI4	C103	C203	C303	CD03
LI5	C104	C204	C304	CD04
LI6	C105	C205	C305	CD05
LI7	C106	C206	C306	CD06
LI8	C107	C207	C307	CD07
LI9	C108	C208	C308	CD08
LI10	C109	C209	C309	CD09
LI11	C110	C210	C310	CD10
LI12	C111	C211	C311	CD11
LI13	C112	C212	C312	CD12
LI14	C113	C213	C313	CD13
-	C114	C214	C314	CD14
-	C115	C215	C315	CD15

(1) If [2/3 wire control] (tCC) page 83 = [3 wire] (3C), LI2, C101, C201, C301, and C401 cannot be accessed.

Buy: www.ValinOnline.com | Phone 844-385-3099 | Email: CustomerService@valin.com

Assignment conditions for logic inputs and control bits

The following elements are available for every command or function that can be assigned to a logic input or a control bit:

[LI1] (LI1) to [LI6] (LI6)	Drive with or without option
[LI7] (LI7) to [LI10] (LI10)	With MT-VW3A3201 logic I/O card
[LI11] (LI11) to [LI14] (LI14)	With MT-VW3A3202 extended I/O card
[C101] (C101) to [C110] (C110)	With integrated Modbus in [I/O profile] (IO) configuration
[C111] (C111) to [C115] (C115)	With integrated Modbus regardless of configuration
[C201] (C201) to [C210] (C210)	With integrated CANopen in [I/O profile] (IO) configuration
[C211] (C211) to [C215] (C215)	With integrated CANopen regardless of configuration
[C301] (C301) to [C310] (C310)	With a communication card in [I/O profile] (IO) configuration
[C311] (C311) to [C315] (C315)	With a communication card regardless of configuration
[CD00] (Cd00) to [CD10] (Cd10)	In [I/O profile] (IO) configuration
[CD11] (Cd11) to [CD15] (Cd15)	Regardless of configuration

☞ **Note :** In [I/O profile] (IO) configuration, LI1 cannot be accessed and if [2/3 wire control] (tCC) page 83 = [3 wire] (3C), LI2, C101, C201, C301 and C401 cannot be accessed either.

⚠ WARNING

UNINTENDED EQUIPMENT OPERATION

Inactive communication channels are not monitored (no lock following malfunction in the event of a communication bus failure). Make sure that the commands and functions assigned to bits C101 to C415 will not pose a risk in the event of the failure of the associated communication bus.

Failure to follow these instructions can result in death or serious injury.

Buy: www.ValinOnline.com | Phone 844-385-3099 | Email: CustomerService@valin.com

Code	Name/Description	Adjustment range	Factory setting
Fr1	❑ **[Ref.1 channel]** ☐ **[AI1]** (AI1): Analog input ☐ **[AI2]** (AI2): Analog input ☐ **[AI3]** (AI3): Analog input, if MT-VW3A3202 extension card has been inserted ☐ **[AI4]** (AI4): Analog input, if MT-VW3A3202 extension card has been inserted ☐ **[HMI]** (LCC): Graphic display terminal ☐ **[Modbus]** (Mdb): Integrated Modbus ☐ **[CANopen]** (CAn): Integrated CANopen ☐ **[Com. card]** (nEt): Communication card (if inserted) ☐ **[C.Insid. card]** (APP): Not applicable ☐ **[RP]** (PI): Frequency input, if MT-VW3A3202 extension card has been inserted, ☐ **[Encoder]** (PG): Encoder input, if encoder card has been inserted		[AI1] (AI1)
rIn	❑ **[RV Inhibition]** ☐ **[No]** (nO) ☐ **[Yes]** (YES) Inhibition of movement in reverse direction, does not apply to direction requests sent by logic inputs. - Reverse direction requests sent by logic inputs are taken into account. - Reverse direction requests sent by the graphic display terminal are not taken into account. - Reverse direction requests sent by the line are not taken into account. - Any reverse speed reference originating from the PID, summing input, etc., is interpreted as a zero reference.		[No] (nO)
PSt	❑ **[Stop Key priority]** ☐ **[No]** (nO) ☐ **[Yes]** (YES): Gives priority to the STOP key on the graphic display terminal when the graphic display terminal is not enabled as the command channel. Press and hold down ENT for 2 seconds in order for any change in the assignment of [Stop Key priority] (PSt) to be taken into account. This will be a freewheel stop. If the active command channel is the graphic display , the stop will be performed according to the [Type of stop] (Stt) page 134 irrespective of the configuration of [Stop Key priority] (PSt).		[Yes] (YES)
CHCF	❑ **[Profile]** ☐ Not applicable for MT Series ☐ ☐ ☐ ☐ ☐ **[Not separ.]** (SIM): Reference and command, not separate ☐ **[Separate]** (SEP): Separate reference and command. This assignment cannot be accessed in [I/O profile] (IO). ☐ **[I/O profile]** (IO): I/O profile When [8 serie] (SE8) is selected and [I/O profile] (IO) is deselected, the drive automatically returns to the factory setting (this is mandatory). This factory setting only affects the [1 DRIVE MENU] menu. It does not affect either [1.9 COMMUNICATION] or [1.5 PROGRAMMABLE CARD]. - With the graphic display , a screen appears to perform this operation. Follow the instructions on the screen. - With the integrated display , press ENT and hold it down (for 2 s). This will save the selection and return to the factory setting.		[Not separ.] (SIM)

Buy: www.ValinOnline.com | Phone 844-385-3099 | Email: CustomerService@valin.com

Code	Name/Description	Adjustment range	Factory setting
CCS	❑ **[Cmd switching]** The parameter can be accessed if [Profile] (CHCF) = [Separate] (SEP) or [I/O profile] (IO) Cd1 ☐ **[ch1 active]** (Cd1): [Cmd channel 1] (Cd1) active (no switching) Cd2 ☐ **[ch2 active]** (Cd2): [Cmd channel 2] (Cd2) active (no switching) LI1 ☐ **[LI1]** (LI1) - : - : - ☐ **[...]** (...): See the assignment conditions on page 118 (not CDOO to CD14). If the assigned input or bit is at 0, channel [Cmd channel 1] (Cd1) is active. If the assigned input or bit is at 1, channel [Cmd channel 2] (Cd2) is active.		[ch1 active] (Cd1)
Cd1	❑ **[Cmd channel 1]** tEr ☐ **[Terminals]** (tEr): Terminals LCC ☐ **[HMI]** (LCC): Graphic display keypad Mdb ☐ **[Modbus]** (Mdb): Integrated Modbus CAn ☐ **[CANopen]** (CAn): Integrated CANopen nEt ☐ **[Com. card]** (nEt): Communication card (if inserted) APP ☐ **[C.Insid. card]** (APP): Not applicable The parameter is available if [Profile] (CHCF) = [Separate] (SEP) or [I/O profile] (IO).		[Terminals] (tEr)
Cd2	❑ **[Cmd channel 2]** tEr ☐ **[Terminals]** (tEr): Terminals LCC ☐ **[HMI]** (LCC): Graphic display terminal Mdb ☐ **[Modbus]** (Mdb): Integrated Modbus CAn ☐ **[CANopen]** (CAn): Integrated CANopen nEt ☐ **[Com. card]** (nEt): Communication card (if inserted) APP ☐ **[C.Insid. card]** (APP): Not applicable The parameter is available if [Profile] (CHCF) = [Separate] (SEP) or [I/O profile] (IO).		[Modbus] (Mdb)
rFC	❑ **[Ref. 2 switching]** Fr1 ☐ **[ch1 active]** (Fr1): no switching, [Ref.1 channel] (Fr1) active Fr2 ☐ **[ch2 active]** (Fr2): no switching, [Ref.2 channel] (Fr2) active LI1 ☐ **[LI1]** (LI1) - : - : - ☐ **[...]** (...): See the assignment conditions on page 118 (not CDOO to CD14). If the assigned input or bit is at 0, channel [Ref.1 channel] (Fr1) is active. If the assigned bit or input is at 1, channel [Ref.2 channel] (Fr2) is active.		[ch1 active] (Fr1)
Fr2	❑ **[Ref.2 channel]** nO ☐ **[No]** (nO): Not assigned. If [Profile] (CHCF) = [Not separ.] (SIM) the command is at the terminals with a zero reference. If [Profile] (CHCF) = [Separate] (SEP) or [I/O profile] (IO) the reference is zero. AI1 ☐ **[AI1]** (AI1): Analog input AI2 ☐ **[AI2]** (AI2): Analog input AI3 ☐ **[AI3]** (AI3): Analog input, if MT-VW3A3202 extension card has been inserted AI4 ☐ **[AI4]** (AI4): Analog input, if MT-VW3A3202 extension card has been inserted UPdt ☐ **[+/- Speed]** (UPdt) : +/- Speed command LCC ☐ **[HMI]** (LCC): Graphic display keypad Mdb ☐ **[Modbus]** (Mdb): Integrated Modbus CAn ☐ **[CANopen]** (CAn): Integrated CANopen nEt ☐ **[Com. card]** (nEt): Communication card (if inserted) APP ☐ **[C.Insid. card]** (APP): Not applicable PI ☐ **[RP]** (PI): Frequency input, if MT-VW3A3202 extension card has been inserted PG ☐ **[Encoder]** (PG): Encoder input, if encoder card has been inserted		[No] (nO)

Buy: www.ValinOnline.com | Phone 844-385-3099 | Email: CustomerService@valin.com

Code	Name/Description	Adjustment range	Factory setting
COP	❑ **[Copy channel 1 <> 2]**		[No] (nO)

Can be used to copy the current reference and/or the command by means of switching, in order to avoid speed surges, for example.
If [Profile] (CHCF) page 119 = [Not separ.] (SIM) or [Separate] (SEP), copying will only be possible from channel 1 to channel 2.
If [Profile] (CHCF) = [I/O profile] (IO), copying will be possible in both directions.

- nO ☐ **[No]** (nO): No copy
- SP ☐ **[Reference]** (SP): Copy reference
- Cd ☐ **[Command]** (Cd): Copy command
- ALL ☐ **[Cmd + ref.]** (ALL): Copy command and reference
  - A reference or a command cannot be copied to a channel on the terminals.
  - The reference copied is FrH (before ramp) unless the destination channel reference is set via +/- speed. In this case, the reference copied is rFr (after ramp).

⚠ WARNING

UNINTENDED EQUIPMENT OPERATION

Copying the command and/or reference can change the direction of rotation.
Check that this is safe.
Failure to follow these instructions can result in death or serious injury.

Buy: www.ValinOnline.com | Phone 844-385-3099 | Email: CustomerService@valin.com

As the graphic display keypad may be selected as the command and/or reference channel, its action modes can be configured.
The parameters on this page can only be accessed on the graphic display keypad, and not on the integrated display keypad.

Comments:

- The display terminal command/reference is only active if the command and/or reference channels from the keypad are active with the exception of [T/K] (command via the display keypad), which takes priority over these channels. Press [T/K] (command via the display keypad) again to revert control to the selected channel.
- Command and reference via the display keypad are impossible if the latter is connected to more than one drive.
- The JOG, preset speed and +/- speed functions can only be accessed if [Profile] (CHCF) = [Not separ.] (SIM).
- The preset PID reference functions can only be accessed if [Profile] (CHCF) = [Not separ.] (SIM) or [Separate] (SEP)
- The [T/K] (command via the display keypad) can be accessed regardless of the [Profile] (CHCF).

Name/Description	Adjustment range	Factory setting
❑ **[F1 key assignment]**		[No]
☐ **[No]**: Not assigned ☐ **[Jog]** : JOG operation ☐ **[Preset spd2]**: Press the key to run the drive at the 2nd preset speed [Preset speed 2] (SP2) page 141. Press STOP to stop the drive. ☐ **[Preset spd3]**: Press the key to run the drive at the 3rd preset speed [Preset speed 3] (SP3) page 141. Press STOP to stop the drive. ☐ **[PID ref. 2]**: Sets a PID reference equal to the 2nd preset PID reference [Preset ref. PID 2] (rP2) page 174, without sending a run command. Only operates if [Ref.1 channel] (Fr1) = [HMI] (LCC). Does not operate with the [T/K] function. ☐ **[PID ref. 3]** : Sets a PID reference equal to the 3rd preset PID reference [Preset ref. PID 3] (rP3) page 174, without sending a run command. Only operates if [Ref.1 channel] (Fr1) = [HMI] (LCC). Does not operate with the [T/K] function. ☐ **[+speed]**: Faster, only operates if [Ref.2 channel] (Fr2) = [HMI] (LCC). Press the key to run the drive and increase the speed. Press STOP to stop the drive. ☐ **[- speed]**: Slower, only operates if [Ref.2 channel] (Fr2) = [HMI] (LCC) and if a different key has been assigned to [+ speed]. Press the key to run the drive and decrease the speed. Press STOP to stop the drive. ☐ **[T/K]**: Command via the display keypad: takes priority over[Cmd switching] (CCS) and over [Ref. 2 switching] (rFC).		
❑ **[F2 key assignment]** Identical to [F1 key assignment].		[No]
❑ **[F3 key assignment]** Identical to [F1 key assignment].		[No]
❑ **[F4 key assignment]** Identical to [F1 key assignment].		[No]
❑ **[HMI cmd.]** When the [T/K] function is assigned to a key and that function is active, this parameter defines the behavior at the moment when control returns to the graphic display keypad. ☐ **[Stop]** : Stops the drive (although the controlled direction of operation and reference of the previous channel are copied (to be taken into account on the next RUN command)). ☐ **[Bumpless]**: Does not stop the drive (the controlled direction of operation and the reference of the previous channel are copied).		[Stop]

Buy: www.ValinOnline.com | Phone 844-385-3099 | Email: CustomerService@valin.com

[1.7 APPLICATION FUNCT.] (FUn-)

Using graphic display keypad:

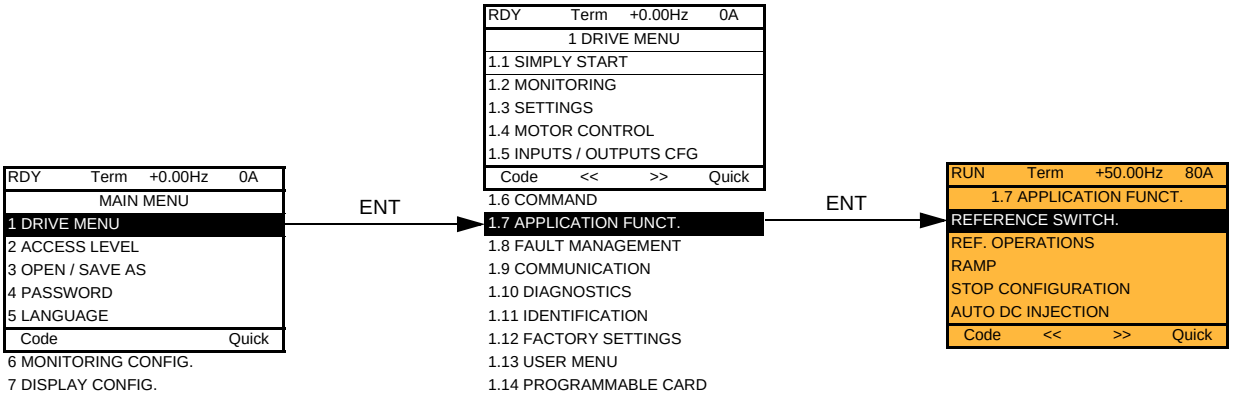

Using integrated display keypad:

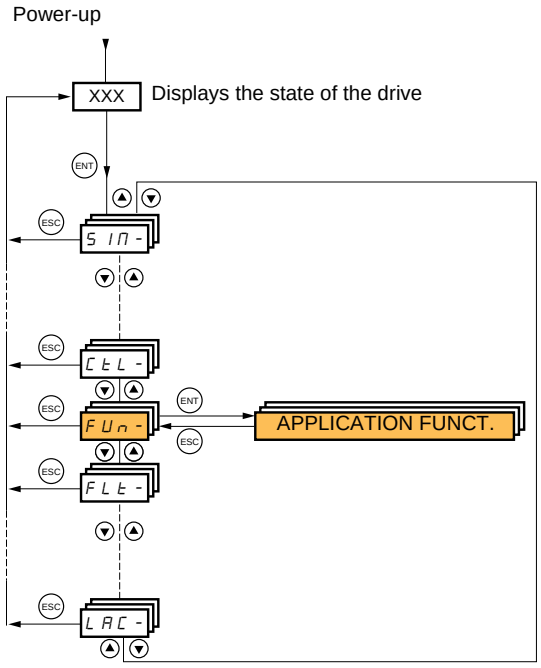

Summary of functions:

Code	Name	Page
rEF-	[REFERENCE SWITCH.]	129
OAI-	[REF. OPERATIONS]	130
rPt-	[RAMP]	131
Stt-	[STOP CONFIGURATION]	134
AdC-	[AUTO DC INJECTION]	136
JOG-	[JOG]	138
PSS-	[PRESET SPEEDS]	140
UPd-	[+/- SPEED]	143
SrE-	[+/-SPEED AROUND REF.]	145
SPM-	[MEMO REFERENCE]	146
FLI-	[FLUXING BY LI]	147
LSt-	[LIMIT SWITCHES]	149
bLC-	[BRAKE LOGIC CONTROL]	154
ELM-	[EXTERNAL WEIGHT MEAS.]	160
HSH-	[HIGH SPEED HOISTING]	165
PId-	[PID REGULATOR]	170
PrI-	[PID PRESET REFERENCES]	174
tOr-	[TORQUE CONTROL]	176
tOL-	[TORQUE LIMITATION]	179
CLI-	[2nd CURRENT LIMIT.]	181
LLC-	[LINE CONTACTOR COMMAND]	183
OCC-	[OUTPUT CONTACTOR CMD]	185
LPO-	[POSITIONING BY SENSORS]	189
MLP-	[PARAM. SET SWITCHING]	192
MMC-	[MULTIMOTORS/CONFIG.]	196
tnL-	[AUTO TUNING BY LI]	196
trO-	[TRAVERSE CONTROL]	202
rFt-	[EVACUATION]	204
HFF-	[HALF FLOOR]	205
dCO-	[DC BUS SUPPLY]	206

Buy: www.ValinOnline.com | Phone 844-385-3099 | Email: CustomerService@valin.com

[1.7 APPLICATION FUNCT.] (FUn-)

The parameters in the [1.7 APPLICATION FUNCT.] (FUn-) menu can only be modified when the drive is stopped and there is no run command, except for parameters with a ( ) symbol in the code column, which can be modified with the drive running or stopped.

☞ **Note: Compatibility of functions**
The choice of application functions may be limited by the number of I/O and by the fact that some functions are incompatible with one another. Functions that are not listed in the table below are fully compatible.
If there is an incompatibility between functions, the first function configured will prevent the others being configured.

Each of the functions on the following pages can be assigned to one of the inputs or outputs.
A single input can activate several functions at the same time (reverse and 2nd ramp for example), **The user must therefore ensure that these functions can be used at the same time.** It is only possible to assign one input to several functions at [Advanced] (AdU) and [Expert] (EPr) levels.

Before assigning a command, reference or function to an input or output, the user must make sure that this input or output has not already been assigned and that another input or output has not been assigned to an incompatible or undesirable function.
The drive factory setting or macro configurations automatically configure functions, **which may prevent other functions being assigned. It may be necessary to unconfigure one or more functions in order to be able to enable another.** Check the compatibility table below.

Buy: www.ValinOnline.com | Phone 844-385-3099 | Email: CustomerService@valin.com

Compatibility table

	Ref. operations (page 130)	+/- speed (3) (page 143)	Management of limit switches (page 149)	Preset speeds (page 140)	PID regulator (page 170)	Traverse control (page 202)	JOG operation (page 138)	Brake logic control (page 154)	Catch on the fly (page 212)		DC injection stop (page 134)	Fast stop (page 134)	Freewheel stop (page 134)	+/- speed around a reference (page 145)	High speed hoisting (page 165)	Torque control (page 176)	Load sharing (page 79)	Positioning by sensors (page 189)	Synchronous motor (page 71)
Ref. operations (page 130)				↑	●(4)		↑									●(1)			
+/- speed (3) (page 143)						●	●									●(1)			
Management of limit switches (page 149)					●														
Preset speeds (page 140)	←						↑									●(1)			
PID regulator (page 170)	●(4)		●			●	●	●						●	●	●(1)	●	●	
Traverse control (page 202)		●			●		●							●	●	●(1)			
JOG operation (page 138)	←	●		←	●	●		●						●	●	●(1)			
Brake logic control (page 154)					●		●		●		●					●			●
Catch on the fly (page 212)								●								●(1)			
DC injection stop (page 134)								●				●(2)	↑						●
Fast stop (page 134)											●(2)		↑						
Freewheel stop (page 134)											←	←							
+/- speed around a reference (page 145)					●	●	●									●(1)			
High speed hoisting (page 165)					●	●	●									●		●	
Torque control (page 176)	●(1)	●(1)		●(1)	●(1)	●(1)	●(1)	●	●(1)					●(1)	●		●	●(1)	●
Load sharing (page 79)					●											●			
Positioning by sensors (page 189)					●										●	●(1)			
Synchronous motor (page 71)								●			●					●			

(1) Torque control and these functions are only incompatible while torque control mode is active.
(2) Priority is given to the first of these two stop modes to be activated.
(3) Excluding special application with reference channel Fr2 (see diagrams on pages 112 and 113).
(4) Only the multiplier reference is incompatible with the PID regulator.

● Incompatible functions Compatible functions Not applicable

Priority functions (functions, which cannot be active at the same time):

← ↑ The function indicated by the arrow has priority over the other.

Stop functions have priority over run commands.
Speed references via logic command have priority over analog references.

☞ **Note:** This compatibility table does not affect commands that can be assigned to the keys of the graphic display keypad (see page 122.

Buy: www.ValinOnline.com | Phone 844-385-3099 | Email: CustomerService@valin.com

Incompatible functions

The following functions will be inaccessible or deactivated in the cases described below:

Automatic restart

This is only possible for control type [2/3 wire control] (tCC) = [2 wire] (2C) and [2 wire type] (tCt) = [Level] (LEL) or [Fwd priority] (PFO). See page 83.

Catch a spinning load

This is only possible for control type [2/3 wire control] (tCC) = [2 wire] (2C) and [2 wire type] (tCt) = [Level] (LEL) or [Fwd priority] (PFO). See page 83.
This function is locked if automatic injection on stop [Auto DC injection] (AdC) = [Continuous] (Ct). See page 136.

The SUP- monitoring menu (page 41) can be used to display the functions assigned to each input in order to check their compatibility.

When a function is assigned, a ✓ appears on the graphic display , as illustrated in the example below:

RDY Term +0.00Hz 0A	
1.7 APPLICATION FUNCT.	
REFERENCE SWITCH.	
REF. OPERATIONS	
RAMP	✓
STOP CONFIGURATION	
AUTO DC INJECTION	
Code << >>	Quick

JOG

If you attempt to assign a function that is incompatible with another function that has already been assigned, an alarm message will appear:

With the graphic display terminal:

RDY Term +0.00Hz 0A
INCOMPATIBILITY
The function can't be assigned because an incompatible function is already selected. See programming book.
ENT or ESC to continue

With the integrated display:
COMP flashes until ENT or ESC is pressed.

When you assign a logic input, an analog input, a reference channel or a bit to a function, pressing the HELP button will display the functions that may already have been activated by this input, bit or channel.

Buy: www.ValinOnline.com | Phone 844-385-3099 | Email: CustomerService@valin.com

When a logic input, an analog input, a reference channel or a bit that has already been assigned is assigned to another function, the following screens appear:

Using the graphic display keypad:

```
RUN    +50.00Hz    1250A   +50.00Hz
      WARNING - ASSIGNED TO
Ref. 2 switching

  ENT->Continue        ESC->Cancel
```

If the access level permits this new assignment, pressing ENT confirms the assignment.
If the access level does not permit this new assignment, pressing ENT results in the following display:

```
RUN    +50.00Hz    1250A   +50.00Hz
      ASSIGNMENT FORBIDDEN
Un-assign the present
functions, or select
Advanced access level
```

Using the integrated display keypad:

The code for the first function, which is already assigned, is displayed flashing.
If the access level permits this new assignment, pressing ENT confirms the assignment.
If the access level does not permit this new assignment, pressing ENT has no effect, and the message continues to flash. It is only possible to exit by pressing ESC.

Buy: www.ValinOnline.com | Phone 844-385-3099 | Email: CustomerService@valin.com

Summing input/Subtracting input/Multiplier

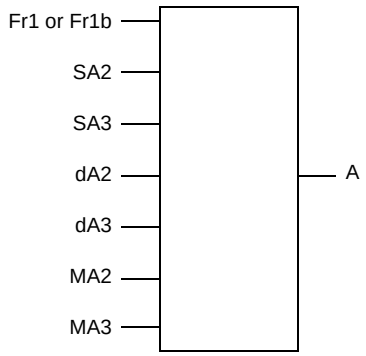

A = (Fr1 or Fr1b + SA2 + SA3 - dA2 - dA3) x MA2 x MA3

- If SA2, SA3, dA2, dA3 are not assigned, they are set to 0.
- If MA2, MA3 are not assigned, they are set to 1.
- A is limited by the minimum LSP and maximum HSP parameters.
- For multiplication, the signal on MA2 or MA3 is interpreted as a %; 100% corresponds to the maximum value of the corresponding input. If MA2 or MA3 is sent via the communication bus or graphic display keypad, an MFr multiplication variable, page 46 must be sent via the bus or graphic display keypad
- Reversal of the direction of operation in the event of a negative result can be inhibited (see page 119).

Buy: www.ValinOnline.com | Phone 844-385-3099 | Email: CustomerService@valin.com

Code	Name/Description	Adjustment range	Factory setting
rEF-	**[REFERENCE SWITCH.]**		
rCb	**[Ref 1B switching]** See the diagrams on pages 112 and 113. Fr1 **[ch1 active]** (Fr1): no switching, [Ref.1 channel] (Fr1) active Fr1b **[ch1B active]** (Fr1b): no switching, [Ref.1B channel] (Fr1b) active LI1 **[LI1]** (LI1) - : - : - **[...]** (...): See the assignment conditions on page 118 (not CDOO to CD14). • If the assigned input or bit is at 0, [Ref.1 channel] (Fr1) is active (see page 119). • If the assigned input or bit is at 1, [Ref.1B channel] (Fr1b) is active. [Ref 1B switching] (rCb) is forced to [ch1 active] (Fr1) if [Profile] (CHCF) = [Not separ.] (SIM) with [Ref.1 channel] (Fr1) assigned via the terminals (analog inputs, encoder, pulse input); see page 119.		[ch1 active] (Fr1)
Fr1b	**[Ref.1B channel]** nO **[No]** (nO): Not assigned AI1 **[AI1]** (AI1): Analog input AI2 **[AI2]** (AI2): Analog input AI3 **[AI3]** (AI3): Analog input, if MT-VW3A3202 extension card has been inserted AI4 **[AI4]** (AI4): Analog input, if MT-VW3A3202 extension card has been inserted LCC **[HMI]** (LCC): Graphic display keypad Mdb **[Modbus]** (Mdb): Integrated Modbus CAn **[CANopen]** (CAn): Integrated CANopen nEt **[Com. card]** (nEt): Communication card (if inserted) APP **[C.Insid. card]** (APP): Not applicable PI **[RP]** (PI): Frequency input, if MT-VW3A3202 extension card has been inserted PG **[Encoder]** (PG): Encoder input, if encoder card has been inserted **Note**: In the following instances, only assignments via the terminals are possible: - [Profile] (CHCF) = [Not separ.] (SIM) with [Ref.1 channel] (Fr1) assigned via the terminals (analog inputs, encoder, pulse input); see page 119. - PID configured with PID references via the terminals		[No] (nO)

Buy: www.ValinOnline.com | Phone 844-385-3099 | Email: CustomerService@valin.com

Code	Name/Description	Adjustment range	Factory setting
OAI-	**[REF. OPERATIONS]** Reference = (Fr1 or Fr1b + SA2 + SA3 - dA2 - dA3) x MA2 x MA3. See the diagrams on pages 112 and 113. **Note:** This function cannot be used with certain other functions. Follow the instructions on page 124.		
SA2	**[Summing ref. 2]** Selection of a reference to be added to [Ref.1 channel] (Fr1) or [Ref.1B channel] (Fr1b). nO **[No]** (nO): No source assigned AI1 **[AI1]** (AI1): Analog input AI2 **[AI2]** (AI2): Analog input AI3 **[AI3]** (AI3): Analog input, if MT-VW3A3202 extension card has been inserted AI4 **[AI4]** (AI4): Analog input, if MT-VW3A3202 extension card has been inserted LCC **[HMI]** (LCC): Graphic display terminal Mdb **[Modbus]** (Mdb): Integrated Modbus CAn **[CANopen]** (CAn): Integrated CANopen nEt **[Com. card]** (nEt): Communication card (if inserted) APP **[C.Insid. card]** (APP): Not applicable PI **[RP]** (PI): Frequency input, if MT-VW3A3202 extension card has been inserted PG **[Encoder]** (PG): Encoder input, if encoder card has been inserted AIU1 **[Network AI]** (AIU1): Virtual input via communication bus, can be configured using [AI net. channel] (AIC1) page 92. **WARNING** **UNINTENDED EQUIPMENT OPERATION** If the equipment switches to forced local mode (see page 234), the virtual input remains fixed at the last value transmitted. Do not use the virtual input and forced local mode in the same configuration. **Failure to follow these instructions can result in death or serious injury.**	[No] (nO)	
SA3	**[Summing ref. 3]** Selection of a reference to be added to [Ref.1 channel] (Fr1) or [Ref.1B channel] (Fr1b). • Possible assignments are identical to [Summing ref. 2] (SA2) above.	[No] (nO)	
dA2	**[Subtract. ref. 2]** Selection of a reference to be subtracted from [Ref.1 channel] (Fr1) or [Ref.1B channel] (Fr1b). • Possible assignments are identical to [Summing ref. 2] (SA2) above.	[No] (nO)	
dA3	**[Subtract. ref. 3]** Selection of a reference to be subtracted from [Ref.1 channel] (Fr1) or [Ref.1B channel] (Fr1b). • Possible assignments are identical to [Summing ref. 2] (SA2) above.	[No] (nO)	
MA2	**[Multiplier ref. 2]** Selection of a multiplier reference [Ref.1 channel] (Fr1) or [Ref.1B channel] (Fr1b). • Possible assignments are identical to [Summing ref. 2] (SA2) above.	[No] (nO)	
MA3	**[Multiplier ref. 3]** Selection of a multiplier reference [Ref.1 channel] (Fr1) or [Ref.1B channel] (Fr1b). • Possible assignments are identical to [Summing ref. 2] (SA2) above.	[No] (nO)	

Buy: www.ValinOnline.com | Phone 844-385-3099 | Email: CustomerService@valin.com

Code	Name/Description	Adjustment range	Factory setting
rPt-	**[RAMP]**		
rPt LIn S U CUS	**[Ramp type]** ☐ **[Linear]** (LIn) ☐ **[S ramp]** (S) ☐ **[U ramp]** (U) ☐ **[Customized]** (CUS) S ramps 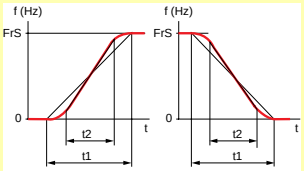 The rounding coefficient is fixed, where t2 = 0.6 x t1 and t1 = set ramp time. U ramps 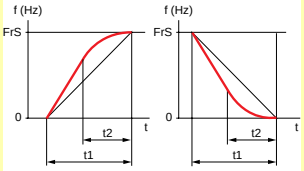 The rounding coefficient is fixed, where t2 = 0.5 x t1 and t1 = set ramp time. Customized ramps 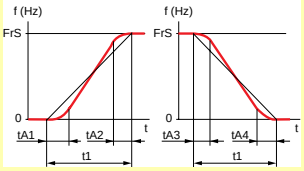 tA1: adjustable from 0 to 100% tA2: adjustable from 0 to (100% - tA1) tA3: adjustable from 0 to 100% tA4: adjustable from 0 to (100% - tA3) As a % of t1, where t1 = set ramp time		[Linear] (LIn)
Inr ( )	**[Ramp increment]** (1) ☐ **[0,01]**: Ramp up to 99.99 seconds ☐ **[0,1]**: Ramp up to 999.9 seconds ☐ **[1]**: Ramp up to 6000 seconds This parameter is valid for [Acceleration] (ACC), [Deceleration] (dEC), [Acceleration 2] (AC2) and [Deceleration 2] (dE2).		[0,1] (0.1)
0.01 0.1 1			
ACC ( )	**[Acceleration]** (1) Time to accelerate from 0 to the [Rated motor freq.] (FrS) (page 64). Make sure that this value is compatible with the inertia being driven.	0.01 to 6000 s (2)	3.0 s
dEC ( )	**[Deceleration]** (1) Time to decelerate from the [Rated motor freq.] (FrS) (page 64) to 0. Make sure that this value is compatible with the inertia being driven.	0.01 to 6000 s (2)	3.0 s

(1) The parameter can also be accessed in the [1.3 SETTINGS] (SEt-)menu.
(2) Range 0.01 to 99.99 s or 0.1 to 999.9 s or 1 to 6000 s according to [Ramp increment] (Inr).

( ) Parameter that can be modified during operation or when stopped.

Buy: www.ValinOnline.com | Phone 844-385-3099 | Email: CustomerService@valin.com

Code	Name/Description	Adjustment range	Factory setting
	[RAMP] (continued)		
tA1	**[Begin Acc round]** (1) - Rounding of start of acceleration ramp as a % of the [Acceleration] (ACC) or [Acceleration 2] (AC2) ramp time. - Can be set between 0 and 100% - The parameter can be accessed if the [Ramp type] (rPt) is [Customized] (CUS).	0 to 100%	10%
tA2	**[End Acc round]** (1) - Rounding of end of acceleration ramp as a % of the [Acceleration] (ACC) or [Acceleration 2] (AC2) ramp time. - Can be set between 0 and (100% - [Begin Acc round] (tA1)) - The parameter can be accessed if the [Ramp type] (rPt) is [Customized] (CUS).		10%
tA3	**[Begin Dec round]** (1) - Rounding of start of deceleration ramp as a % of the [Deceleration] (dEC) or [Deceleration 2] (dE2) ramp time. - Can be set between 0 and 100% - The parameter can be accessed if the [Ramp type] (rPt) is [Customized] (CUS).	0 to 100%	10%
tA4	**[End Dec round]** (1) - Rounding of end of deceleration ramp as a % of the [Deceleration] (dEC) or [Deceleration 2] (dE2) ramp time. - Can be set between 0 and (100% - [Begin Dec round] (tA3)) - The parameter can be accessed if the [Ramp type] (rPt) is [Customized] (CUS).		10%

(1) The parameter can also be accessed in the [1.3 SETTINGS] (SEt-)menu.

Parameter that can be modified during operation or when stopped.

Buy: www.ValinOnline.com | Phone 844-385-3099 | Email: CustomerService@valin.com

Code	Name/Description	Adjustment range	Factory setting
	[RAMP] (continued)		
Frt	**[Ramp 2 threshold]**	0 to 500 or 1600 Hz according to rating	0 Hz

Ramp switching threshold
The 2nd ramp is switched if the value of Frt is not 0 (0 deactivates the function) and the output frequency is greater than Frt.
Threshold ramp switching can be combined with [Ramp switch ass.] (rPS) switching as follows:

LI or bit	Frequency	Ramp
0	<Frt	ACC, dEC
0	>Frt	AC2, dE2
1	<Frt	AC2, dE2
1	>Frt	AC2, dE2

rPS	**[Ramp switch ass.]**	[No] (nO)

- nO **[No]** (nO): Not assigned
- LI1 **[LI1]** (LI1)
  :
  :
- - **[...]** (...): See the assignment conditions on page 118.
  - ACC and dEC are enabled when the assigned input or bit is at 0.
  - AC2 and dE2 are enabled when the assigned input or bit is at 1.

AC2 ( )	**[Acceleration 2]** (1)	0.01 to 6000 s (2)	5.0 s

Time to accelerate from 0 to the [Rated motor freq.] (FrS). Make sure that this value is compatible with the inertia being driven.
The parameter can be accessed if [Ramp 2 threshold] (Frt) > 0 or if [Ramp switch ass.] (rPS) is assigned.

dE2 ( )	**[Deceleration 2]** (1)	0.01 to 6000 s (2)	5.0 s

Time to decelerate from [Rated motor freq.] (FrS) to 0. Make sure that this value is compatible with the inertia being driven.
The parameter can be accessed if [Ramp 2 threshold] (Frt) > 0 or if [Ramp switch ass.] (rPS) is assigned.

brA	**[Dec ramp adapt.]**	[Yes] (YES)

Activating this function automatically adapts the deceleration ramp, if this has been set at too low a value for the inertia of the load, which can cause an overvoltage fault.

- nO **[No]** (nO): Function inactive
- YES **[Yes]** (YES): Function active, for applications that do not require strong deceleration.

The following selections appear depending on the rating of the drive and [Motor control type] (Ctt) page 66.
They enable stronger deceleration to be obtained than with [Yes] (YES). Use comparative testing to determine your selection.

- dYnA **[High torq. A]** (dYnA)
- dYnb **[High torq. B]** (dYnb)
- dYnC **[High torq. C]** (dYnC)

[Dec ramp adapt.] (brA) is forced to [No] (nO) if the brake logic control[Brake assignment] (bLC) is assigned (page 154), or if [Braking balance] (bbA) page 79 = [Yes] (YES). The factory setting changes to [High torq. A] (dYnA) with certain ratings if [Sinus filter] (OFI) page 76 = [Yes] (YES).
The function is incompatible with applications requiring:
- Positioning on a ramp
- The use of a braking resistor (the resistor would not operate correctly)

(1) The parameter can also be accessed in the [1.3 SETTINGS] (SEt-)menu.
(2) Range 0.01 to 99.99 s or 0.1 to 999.9 s or 1 to 6000 s according to [Ramp increment] (Inr) page 131.

( ) Parameter that can be modified during operation or when stopped.

Buy: www.ValinOnline.com | Phone 844-385-3099 | Email: CustomerService@valin.com

Code	Name/Description	Adjustment range	Factory setting
Stt-	**[STOP CONFIGURATION]** **Note:** Some types of stop cannot be used with all other functions. Follow the instructions on page 124.		
Stt rMP FSt nSt dCI	**[Type of stop]**		[Ramp stop] (rMP)
	Stop mode on disappearance of the run command or appearance of a stop command. ☐ **[Ramp stop]** (rMP): Stop on ramp. ☐ **[Fast stop]** (FSt): Fast stop ☐ **[Freewheel stop]** (nSt): Freewheel stop ☐ **[DC injection]** (dCI): DC injection stop **Note:** If the "brake logic" function on page 154 has been enabled, or if [Low speed time out] (tLS) page 57 or 173 is not 0, only ramp type stops may be configured.		
FFt	**[Freewheel stop Thd.]** (1)	0.0 to 1600 Hz	0.0 Hz
	This parameter supports switching from a ramp stop or a fast stop to a freewheel stop below a low speed threshold. It can be accessed if [Type of stop] (Stt) = [Fast stop] (FSt) or [Ramp stop] (rMP). ☐ 0.0: Does not switch to freewheel stop. ☐ 0.1 to 1600 Hz: Speed threshold below which the motor will switch to freewheel stop.		
nSt nO LI1 - - C101 - - - Cd00 -	**[Freewheel stop ass.]**		[No] (nO)
	☐ **[No]** (nO): Not assigned ☐ **[LI1]** (LI1) to **[LI6]** (LI6) ☐ **[LI7]** (LI7) to **[LI10]** (LI10): If MT-VW3A3201 logic I/O card has been inserted ☐ **[LI11]** (LI11) to **[LI14]** (LI14): If MT-VW3A3202 extended I/O card has been inserted ☐ **[C101]** (C101) to **[C115]** (C115): With integrated Modbus in [I/O profile] (IO) ☐ **[C201]** (C201) to **[C215]** (C215): With integrated CANopen in [I/O profile] (IO) ☐ **[C301]** (C301) to **[C315]** (C315): With a communication card in [I/O profile] (IO) ☐ **[C401]** (C401) to **[C415]** (C415): Not applicable ☐ **[CD00]** (Cd00) to **[CD13]** (Cd13): In [I/O profile] can be switched with possible logic inputs ☐ **[CD14]** (Cd14) to **[CD15]** (Cd15): In [I/O profile] can be switched without logic inputs The stop is activated when the input or the bit changes to 0. If the input returns to state 1 and the run command is still active, the motor will only restart if [2/3 wire control] (tCC) page 83 = [2 wire] (2C) and the [2 wire type] (tCt) = [Level] (LEL) or [Fwd priority] (PFO). If not, a new run command must be sent.		
FSt nO LI1 - - -	**[Fast stop assign.]**		[No] (nO)
	Note: This function cannot be used with certain other functions. Follow the instructions on page 124. ☐ **[No]** (nO): Not assigned ☐ **[LI1]** (LI1) : : ☐ **[...]** (...): See the assignment conditions on page 118. The stop is activated when the input changes to 0 or the bit changes to 1 (bit in [I/O profile] (IO) at 0). If the input returns to state 1 and the run command is still active, the motor will only restart if [2/3 wire control] (tCC) page 83 = [2 wire] (2C) and the [2 wire type] (tCt) = [Level] (LEL) or [Fwd priority] (PFO). If not, a new run command must be sent.		
dCF	**[Ramp divider]** (1)	0 to 10	4
	The parameter can be accessed if [Type of stop] (Stt) = [Fast stop] (FSt) and if [Fast stop assign.] (FSt) is not [No] (nO). The ramp that is enabled (dEC or dE2) is then divided by this coefficient when stop requests are sent. Value 0 corresponds to a minimum ramp time.		

(1) The parameter can also be accessed in the [1.3 SETTINGS] (SEt-)menu.

Parameter that can be modified during operation or when stopped.

Buy: www.ValinOnline.com | Phone 844-385-3099 | Email: CustomerService@valin.com

Code	Name/Description	Adjustment range	Factory setting
	[STOP CONFIGURATION] (continued)		
dCI	**[DC injection assign.]**		[No] (nO)
	Note: This function cannot be used with certain other functions. Follow the instructions on page 124.		
nO	**[No]** (nO): Not assigned		
LI1	**[LI1]** (LI1)		
-	:		
-	:		
-	**[...]** (...): See the assignment conditions on page 118.		
	DC injection braking is initiated when the assigned input or bit changes to state 1. If the input returns to state 1 and the run command is still active, the motor will only restart if [2/3 wire control] (tCC) page 83 = [2 wire] (2C) and [2 wire type] (tCt) = [Level] (LEL) or [Fwd priority] (PFO). If not, a new run command must be sent.		
IdC	**[DC inject. level 1]** (1) (3)	0.1 to 1.41 In (2)	0.64 In (2)
	Level of DC injection braking current activated via logic input or selected as stop mode. The parameter can be accessed if [Type of stop] (Stt) = [DC injection] (dCI) or if [DC injection assign.] (dCI) is not [No] (nO).		
	CAUTION Check that the motor will withstand this current without overheating. **Failure to follow this instruction can result in equipment damage.**		
tdI	**[DC injection time 1]** (1) (3)	0.1 to 30 s	0.5 s
	Maximum current injection time [DC inject. level 1] (IdC). After this time the injection current becomes [DC inject. level 2] (IdC2). The parameter can be accessed if [Type of stop] (Stt) = [DC injection] (dCI) or if [DC injection assign.] (dCI) is not [No] (nO).		
IdC2	**[DC inject. level 2]** (1) (3)	0.1 In (2) to [DC inject. level 1] (IdC)	0.5 In (2)
	Injection current activated by logic input or selected as stop mode, once period of time [DC injection time 1] (tdI) has elapsed. The parameter can be accessed if [Type of stop] (Stt) = [DC injection] (dCI) or if [DC injection assign.] (dCI) is not [No] (nO).		
	CAUTION Check that the motor will withstand this current without overheating. **Failure to follow this instruction can result in equipment damage.**		
tdC	**[DC injection time 2]** (1) (3)	0.1 to 30 s	0.5 s
	Maximum injection time [DC inject. level 2] (IdC2) for injection, selected as stop mode only. The parameter can be accessed if [Stop type] (Stt) = [DC injection] (dCI).		

(1) The parameter can also be accessed in the [1.3 SETTINGS] (SEt-)menu.
(2) In corresponds to the rated drive current indicated in the Installation Manual and on the drive nameplate.
(3) Warning: These settings are independent of the [AUTO DC INJECTION] (AdC-) function.

Parameter that can be modified during operation or when stopped.

Buy: www.ValinOnline.com | Phone 844-385-3099 | Email: CustomerService@valin.com

Code	Name/Description	Adjustment range	Factory setting
AdC-	**[AUTO DC INJECTION]**		
AdC nO YES Ct	**[Auto DC injection]** Automatic current injection on stopping (at the end of the ramp) ☐ **[No]** (nO): No injection. ☐ **[Yes]** (YES): Adjustable injection time. ☐ **[Continuous]** (Ct): Continuous standstill injection. **Warning**, there is an interlock between this function and [Motor fluxing] (FLU) page 147. If [Motor fluxing] (FLU) = [Continuous] (FCt) [Auto DC injection] (Adc) must be [No] (nO). ☞ **Note:** This parameter gives rise to the injection of current even if a run command has not been sent. It can be accessed with the drive running.		[Yes] (YES)
SdC1	**[Auto DC inj. level 1]** (1) Level of standstill DC injection current [Auto DC injection] (AdC) is not [No] (nO). This parameter is forced to 0 if [Motor control type] (Ctt) page 66 = [Sync. mot.] (SYn).. **CAUTION** Check that the motor will withstand this current without overheating. **Failure to follow this instruction can result in equipment damage.**	0 to 1.2 In (2)	0.7 In (2)
tdC1	**[Auto DC inj. time 1]** (1) Standstill injection time. The parameter can be accessed if [Auto DC injection] (AdC) is not [No] (nO). If [Motor control type] (Ctt) page 66 = [FVC] (FUC) or [Sync. mot.](SYn) this time corresponds to the zero speed maintenance time.	0.1 to 30 s	0.5 s
SdC2	**[Auto DC inj. level 2]** (1) 2nd level of standstill DC injection current. The parameter can be accessed if [Auto DC injection] (AdC) is not [No] (nO). This parameter is forced to 0 if [Motor control type] (Ctt) page 66 = [Sync. mot.] (SYn).. **CAUTION** Check that the motor will withstand this current without overheating. **Failure to follow this instruction can result in equipment damage.**	0 to 1.2 In (2)	0.5 In (2)

(1) The parameter can also be accessed in the [1.3 SETTINGS] (SEt-)menu.
(2) In corresponds to the rated drive current indicated in the Installation Manual and on the drive nameplate.

Parameter that can be modified during operation or when stopped.

Buy: www.ValinOnline.com | Phone 844-385-3099 | Email: CustomerService@valin.com

Code	Name/Description	Adjustment range	Factory setting
	[AUTO DC INJECTION] (continued)		
tdC2	**[Auto DC inj. time 2]** (1) 2nd standstill injection time. The parameter can be accessed if [Auto DC injection] (AdC) = [Yes] (YES.)	0 to 30 s	0 s

AdC	SdC2	Operation
YES	x	
Ct	≠ 0	
Ct	= 0	
Run command		
Speed		

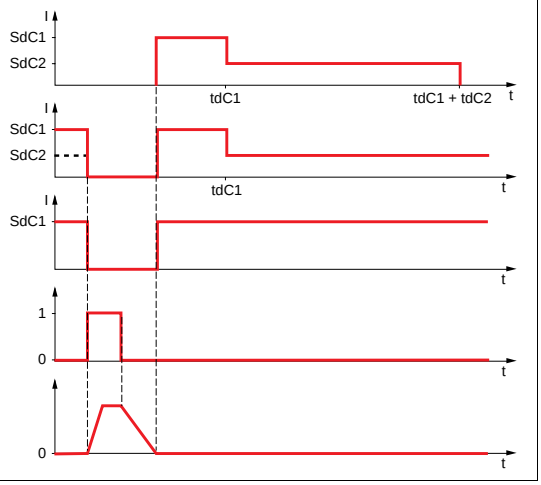

Note: When [Motor control type] (Ctt) page 66 = [FVC] (FUC):
[Auto DC inj. level 1] (SdC1), [Auto DC inj. level 2] (SdC2) and [Auto DC inj. time 2] (tdC2) cannot be accessed, only [Auto DC inj. time 1] (tdC1) can be accessed. This then corresponds to a zero speed maintenance time.

(1) The parameter can also be accessed in the [1.3 SETTINGS] (SEt-)menu.

Parameter that can be modified during operation or when stopped.

Buy: www.ValinOnline.com | Phone 844-385-3099 | Email: CustomerService@valin.com

Code	Name/Description	Adjustment range	Factory setting
JOG-	**[JOG]** **Note:** This function cannot be used with certain other functions. Follow the instructions on page 124.		
JOG	**[JOG]** Pulse operation. **The JOG function is only active if the command channel and the reference channels are on the terminals.** Selecting the assigned logic input or bit activates the function. nO **[No]** (nO): Not assigned LI1 **[LI1]** (LI1) to **[LI6]** (LI6) - **[LI7]** (LI7) to **[LI10]** (LI10): If MT-VW3A3201 logic I/O card has been inserted - **[LI11]** (LI11) to **[LI14]** (LI14): If MT-VW3A3202 extended I/O card has been inserted C101 **[C101]** (C101) to **[C115]** (C115): With integrated Modbus in [I/O profile] (IO) profile - **[C201]** (C201) to **[C215]** (C215): With integrated CANopen in [I/O profile] (IO) profile - **[C301]** (C301) to **[C315]** (C315): With a communication card in [I/O profile] (IO) profile - **[C401]** (C401) to **[C415]** (C415): Not applicable Cd00 **[CD00]** (Cd00) to **[CD13]** (Cd13): In [I/O profile] profile can be switched with possible logic inputs - **[CD14]** (Cd14) to **[CD15]** (Cd15): In [I/O profile] profile can be switched without logic inputs The function is active when the assigned input or bit is at 1. Example: 2-wire control operation (tCC = 2C) 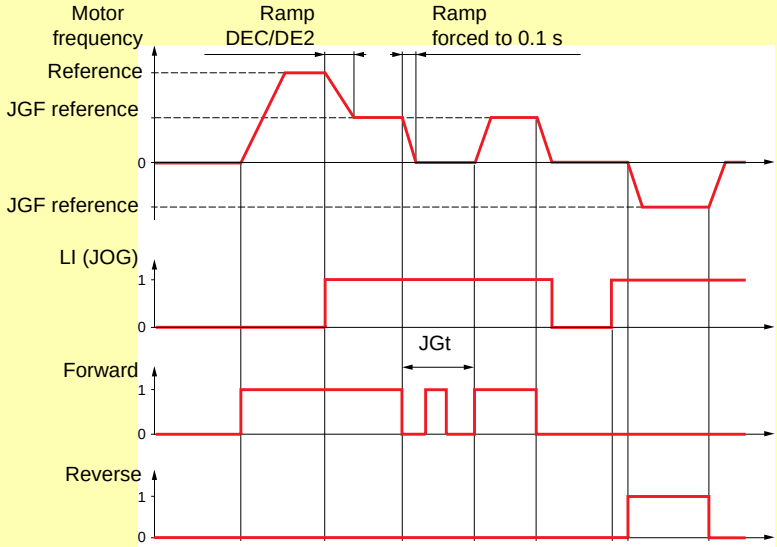 	[No] (nO)	
JGF	**[Jog frequency]** (1) The parameter can be accessed if [JOG] (JOG) is not [No] (nO). Reference in jog operation	0 to 10 Hz	10 Hz
JGt	**[Jog delay]** (1) The parameter can be accessed if [JOG] (JOG) is not [No] (nO). Anti-repeat delay between 2 consecutive jog operations.	0 to 2.0 s	0.5 s

(1) The parameter can also be accessed in the [1.3 SETTINGS] (SEt-) menu.

Parameter that can be modified during operation or when stopped.

Buy: www.ValinOnline.com | Phone 844-385-3099 | Email: CustomerService@valin.com

Preset speeds

2, 4, 8 or 16 speeds can be preset, requiring 1, 2, 3 or 4 logic inputs respectively.

Note: **You must configure 2 and 4 speeds in order to obtain 4 speeds.**
You must configure 2, 4 and 8 speeds in order to obtain 8 speeds.
You must configure 2, 4, 8, and 16 speeds in order to obtain 16 speeds.

Combination table for preset speed inputs

16 speeds LI (PS16)	8 speeds LI (PS8)	4 speeds LI (PS4)	2 speeds LI (PS2)	Speed reference
0	0	0	0	Reference (1)
0	0	0	1	SP2
0	0	1	0	SP3
0	0	1	1	SP4
0	1	0	0	SP5
0	1	0	1	SP6
0	1	1	0	SP7
0	1	1	1	SP8
1	0	0	0	SP9
1	0	0	1	SP10
1	0	1	0	SP11
1	0	1	1	SP12
1	1	0	0	SP13
1	1	0	1	SP14
1	1	1	0	SP15
1	1	1	1	SP16

(1) See the diagram on page 112: Reference 1 = (SP1).

Buy: www.ValinOnline.com | Phone 844-385-3099 | Email: CustomerService@valin.com

Code	Name/Description	Adjustment range	Factory setting
PSS-	**[PRESET SPEEDS]** **Note:** This function cannot be used with certain other functions. Follow the instructions on page 124.		
PS2 nO LI1 - - -	**[2 preset speeds]** **[No]** (nO): Function inactive **[LI1]** (LI1) : : **[...]** (...): See the assignment conditions on page 118.		[No] (nO)
PS4 nO LI1 - - -	**[4 preset speeds]** **[No]** (nO): Function inactive **[LI1]** (LI1) : : **[...]** (...): See the assignment conditions on page 118. To obtain 4 speeds you must also configure 2 speeds.		[No] (nO)
PS8 nO LI1 - - -	**[8 preset speeds]** **[No]** (nO): Function inactive **[LI1]** (LI1) : : **[...]** (...): See the assignment conditions on page 118. To obtain 8 speeds you must also configure 2 and 4 speeds.		[No] (nO)
PS16 nO LI1 - - -	**[16 preset speeds]** **[No]** (nO): Function inactive **[LI1]** (LI1) : : **[...]** (...): See the assignment conditions on page 118. To obtain 16 speeds you must also configure 2, 4 and 8 speeds.		[No] (nO)

Buy: www.ValinOnline.com | Phone 844-385-3099 | Email: CustomerService@valin.com

Code	Name/Description		Adjustment range	Factory setting
	■ [PRESET SPEEDS] (continued)			
SP2 ( )	❑ [Preset speed 2]	(1)	0 to 1600 Hz	10 Hz
SP3 ( )	❑ [Preset speed 3]	(1)		15 Hz
SP4 ( )	❑ [Preset speed 4]	(1)		20 Hz
SP5 ( )	❑ [Preset speed 5]	(1)		25 Hz
SP6 ( )	❑ [Preset speed 6]	(1)		30 Hz
SP7 ( )	❑ [Preset speed 7]	(1)		35 Hz
SP8 ( )	❑ [Preset speed 8]	(1)		40 Hz
SP9 ( )	❑ [Preset speed 9]	(1)		45 Hz
SP10 ( )	❑ [Preset speed 10]	(1)		50 Hz
SP11 ( )	❑ [Preset speed 11]	(1)		55 Hz
SP12 ( )	❑ [Preset speed 12]	(1)		60 Hz
SP13 ( )	❑ [Preset speed 13]	(1)		70 Hz
SP14 ( )	❑ [Preset speed 14]	(1)		80 Hz
SP15 ( )	❑ [Preset speed 15]	(1)		90 Hz
SP16 ( )	❑ [Preset speed 16]	(1)		100 Hz
	The appearance of these [Preset speed x] (SPx) parameters is determined by the number of speeds configured.			

(1) The parameter can also be accessed in the [1.3 SETTINGS] (SEt-)menu.

( ) Parameter that can be modified during operation or when stopped.

Buy: www.ValinOnline.com | Phone 844-385-3099 | Email: CustomerService@valin.com

+/- speed

Two types of operation are available.

1. **Use of single action buttons:** Two logic inputs are required in addition to the operating direction(s).
   The input assigned to the “+ speed” command increases the speed, the input assigned to the “- speed” command decreases the speed.

2. **Use of double action buttons:** Only one logic input assigned to “+ speed” is required.

+/- speed with double-press buttons:

Description: 1 button pressed twice (2 steps) for each direction of rotation. A contact closes each time the button is pressed.

	Released (- speed)	1st press (speed maintained)	2nd press (faster)
Forward button	–	a	a and b
Reverse button	–	c	c and d

Example of wiring:

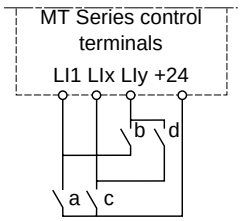

LI1: forward
LIx: Reverse
LIy: + speed

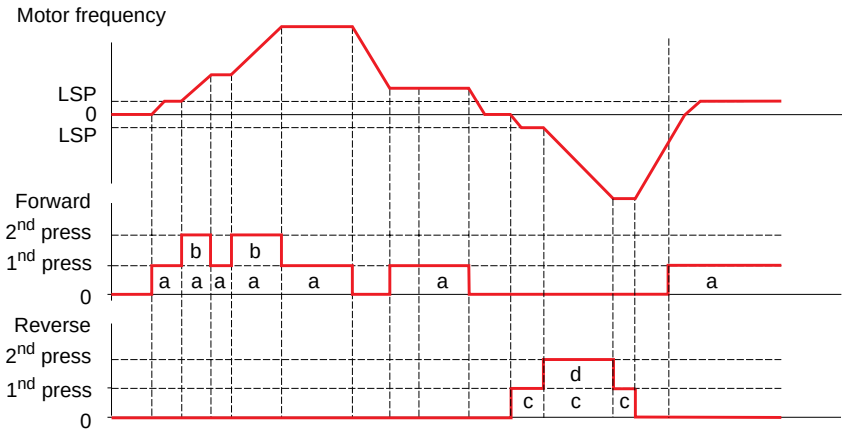

Do not use this +/-speed type with 3-wire control.

Whichever type of operation is selected, the max. speed is set by [High speed] (HSP) (see page 40).

Note:
If the reference is switched via rFC (see page 120) from any one reference channel to another reference channel with "+/- speed", the value of reference rFr (after ramp) may be copied at the same time in accordance with the [Copy channel 1 --> 2] (COP) parameter, see page 121.
If the reference is switched via rFC (see page 120) from one reference channel to any other reference channel with "+/- speed", the value of reference rFr (after ramp) is always copied at the same time.

This prevents the speed being incorrectly reset to zero when switching takes place.

Buy: www.ValinOnline.com | Phone 844-385-3099 | Email: CustomerService@valin.com

Code	Name/Description	Adjustment range	Factory setting
UPd-	**[+/- SPEED]** Function can be accessed if reference channel [Ref.2 channel] (Fr2) = [+/-Speed] (UPdt) see page 120. **Note:** This function cannot be used with certain other functions. Follow the instructions on page 124.		
USP	**[+ speed assignment]**	[No] (nO)	
nO	[No] (nO): Function inactive		
LI1	[LI1] (LI1) to [LI6] (LI6)		
-	[LI7] (LI7) to [LI10] (LI10): If MT-VW3A3201 logic I/O card has been inserted		
-	[LI11] (LI11) to [LI14] (LI14): If MT-VW3A3202 extended I/O card has been inserted		
C101	[C101] (C101) to [C115] (C115): With integrated Modbus in [I/O profile] (IO)		
-	[C201] (C201) to [C215] (C215): With integrated CANopen in [I/O profile] (IO)		
-	[C301] (C301) to [C315] (C315): With a communication card in [I/O profile] (IO)		
-	[C401] (C401) to [C415] (C415): Not applicable		
Cd00	[CD00] (Cd00) to [CD13] (Cd13): In [I/O profile] can be switched with possible logic inputs		
-	[CD14] (Cd14) to [CD15] (Cd15): In [I/O profile] can be switched without logic inputs Function active if the assigned input or bit is at 1.		
dSP	**[-Speed assignment]**	[No] (nO)	
nO	[No] (nO): Function inactive		
LI1	[LI1] (LI1) to [LI6] (LI6)		
-	[LI7] (LI7) to [LI10] (LI10): If MT-VW3A3201 logic I/O card has been inserted		
-	[LI11] (LI11) to [LI14] (LI14): If MT-VW3A3202 extended I/O card has been inserted		
C101	[C101] (C101) to [C115] (C115): With integrated Modbus in [I/O profile] (IO)		
-	[C201] (C201) to [C215] (C215): With integrated CANopen in [I/O profile] (IO)		
-	[C301] (C301) to [C315] (C315): With a communication card in [I/O profile] (IO)		
-	[C401] (C401) to [C415] (C415): Not applicable		
Cd00	[CD00] (Cd00) to [CD13] (Cd13): In [I/O profile] can be switched with possible logic inputs		
-	[CD14] (Cd14) to [CD15] (Cd15): In [I/O profile] can be switched without logic inputs Function active if the assigned input or bit is at 1.		
Str	**[Reference saved]**	[No] (nO)	
	Associated with the "+/- speed" function, this parameter can be used to save the reference: • When the run commands disappear (saved to RAM) • When the line supply or the run commands disappear (saved to EEPROM) Therefore, the next time the drive starts up, the speed reference is the last reference saved.		
nO	[No] (nO): No save (the next time the drive starts up, the speed reference is [Low speed] (LSP), see page 40)		
rAM	[RAM] (rAM): Saved in RAM		
EEP	[EEprom] (EEP): Saved in EEPROM		

Buy: www.ValinOnline.com | Phone 844-385-3099 | Email: CustomerService@valin.com

+/- speed around a reference

The reference is given by Fr1 or Fr1b with summing/subtraction/multiplication functions and preset speeds if relevant (see the diagram on page 112). For improved clarity, we will call this reference A. The action of the +speed and -speed buttons can be set as a % of this reference A. On stopping, the reference (A +/- speed) is not saved, so the drive restarts with reference A+ only.
The maximum total reference is always limited by [High speed] (HSP) and the minimum reference by [Low speed] (LSP), see page 40.

Example of 2-wire control:

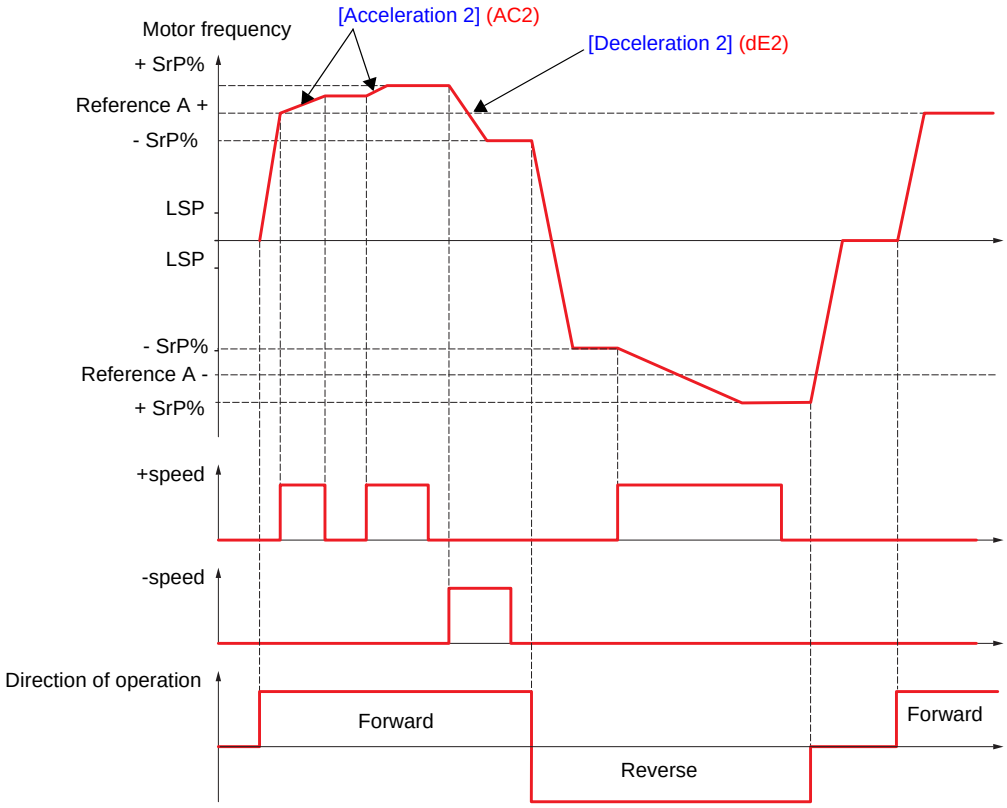

Buy: www.ValinOnline.com | Phone 844-385-3099 | Email: CustomerService@valin.com

Code	Name/Description	Adjustment range	Factory setting
SrE-	**[+/-SPEED AROUND REF.]** The function can be accessed for reference channel [Ref.1 channel] (Fr1). **Note:** This function cannot be used with certain other functions. Follow the instructions on page 124.		
US1 nO LI1 - - -	**[+ speed assignment]** **[No]** (nO): Function inactive **[LI1]** (LI1) : : **[...]** (...): See the assignment conditions on page 118. Function active if the assigned input or bit is at 1.		[No] (nO)
dS1 nO LI1 - - -	**[-Speed assignment]** **[No]** (nO): Function inactive **[LI1]** (LI1) : : **[...]** (...): See the assignment conditions on page 118. Function active if the assigned input or bit is at 1.		[No] (nO)
SrP	**[+/-Speed limitation]** This parameter limits the variation range with +/- speed as a % of the reference. The ramps used in this function are[Acceleration 2] (AC2) and [Deceleration 2] (dE2). The parameter can be accessed if +/- speed is assigned.	0 to 50 %	10 %
AC2	**[Acceleration 2]** (1) Time to accelerate from 0 to the [Rated motor freq.] (FrS). Make sure that this value is compatible with the inertia being driven. The parameter can be accessed if +/- speed is assigned.	0.01 to 6000 s (2)	5.0 s
dE2	**[Deceleration 2]** (1) Time to decelerate from the [Rated motor freq.] (FrS) to 0. Make sure that this value is compatible with the inertia being driven. The parameter can be accessed if +/- speed is assigned.	0.01 to 6000 s (2)	5.0 s

(1) The parameter can also be accessed in the [1.3 SETTINGS] (SEt-)menu.
(2) Range 0.01 to 99.99 s or 0.1 to 999.9 s or 1 to 6000 s according to [Ramp increment] (Inr) page 131.

Parameter that can be modified during operation or when stopped.

Buy: www.ValinOnline.com | Phone 844-385-3099 | Email: CustomerService@valin.com

Save reference

Saving a speed reference value using a logic input command lasting longer than 0.1 s.

- This function is used to control the speed of several drives alternately via a single analog reference and one logic input for each drive.
- It is also used to confirm a line reference (communication bus or network) on several drives via a logic input. This allows movements to be synchronized by getting rid of variations when the reference is set.
- The reference is acquired 100 ms after the rising edge of the request. A new reference is not then acquired until a new request is made.

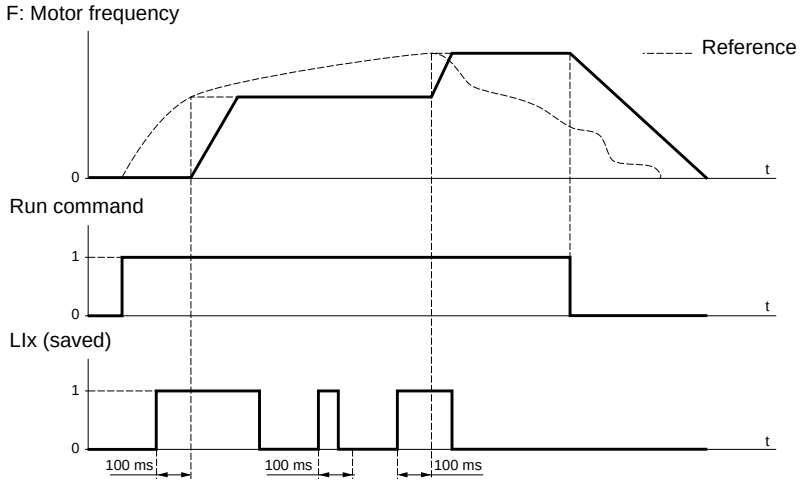

Code	Name/Description	Adjustment range	Factory setting
SPM-	**[MEMO REFERENCE]**		
SPM	**[Ref. memo ass.]**		[No] (nO)
nO LI1 - LI14	☐ **[No]** (nO): Function inactive ☐ **[LI1]** (LI1) to **[LI6]** (LI6) ☐ **[LI7]** (LI7) to **[LI10]** (LI10): If MT-VW3A3201 logic I/O card has been inserted ☐ **[LI11]** (LI11) to **[LI14]** (LI14): If MT-VW3A3202 extended I/O card has been inserted Assignment to a logic input Function active if the assigned input is at 1.		

Buy: www.ValinOnline.com | Phone 844-385-3099 | Email: CustomerService@valin.com

Code	Name/Description	Adjustment range	Factory setting
FLI-	**[FLUXING BY LI]**		
FLU	**[Motor fluxing]**	(1)	[No] (FnO)

- FnC **[Not cont.]** (FnC): Non-continuous mode
- FCt **[Continuous]** (FCt): Continuous mode. This option is not possible if [Auto DC injection] (AdC) page 136 is [Yes] (YES) or if [Type of stop] (Stt) page 134 is [Freewheel] (nSt).
- FnO **[No]** (FnO): Function inactive This option is not possible if [Motor control type] (Ctt) page 66 = [SVCI] (CUC) or [FVC] (FUC).
  If [Motor control type] (Ctt) page 66 = [SVCI] (CUC), [FVC] (FUC) or [Sync. mot.] (SYn) or [SVC V] (UUC) at and above 55 kW (75 HP) for MT●●●●M3X and at and above 90 kW (120 HP) for MT●●●●N4, the factory setting is replaced by [Not cont.] (FnC).

In order to obtain rapid high torque on startup, magnetic flux needs to already have been established in the motor.
- In [Continuous] (FCt) mode, the drive automatically builds up flux when it is powered up.
- In [Not cont.] (FnC) mode, fluxing occurs when the motor starts up.

The flux current is greater than nCr (configured rated motor current) when the flux is established and is then adjusted to the motor magnetizing current...

CAUTION

Check that the motor will withstand this current without overheating.
Failure to follow this instruction can result in equipment damage.

If [Motor control type] (Ctt) page 66 = [Sync. mot.] (SYn), the [Motor fluxing] (FLU) parameter causes the alignment of the rotor and not the fluxing.
If [Brake assignment] (bLC) page 154 is not [No] (nO), the [Motor fluxing] (FLU) parameter has no effect.

FLI	**[Fluxing assignment]**		[No] (nO)

- nO **[No]** (nO): Function inactive
- LI1 **[LI1]** (LI1)
  :
  :
- - **[...]** (...): See the assignment conditions on page 118.

Assignment is only possible if [Motor fluxing] (FLU) is not [Continuous] (FCt).
- In [Not cont.] (FnC) mode:
  - If an LI or a bit is assigned to the motor fluxing command, flux is built up when the assigned input or bit is at 1.
  - If an LI or a bit has not been assigned, or if the LI or bit assigned is at 0 when a run command is sent, fluxing occurs when the motor starts.
- In [No] (FnO) mode:
  - If an LI or a bit is assigned to the motor fluxing command, flux is built up when the assigned input or bit is at 1 and is suppressed when the assigned input or bit is at 0.

(1) The parameter can also be accessed in the [1.3 SETTINGS] (SEt-)menu.

Parameter that can be modified during operation or when stopped.

Buy: www.ValinOnline.com | Phone 844-385-3099 | Email: CustomerService@valin.com

Limit switch management

This function can be used to manage trajectory limits using limit switches.

The stop mode is configurable.
When the stop contact is activated, startup in the other direction is authorized.

Example:

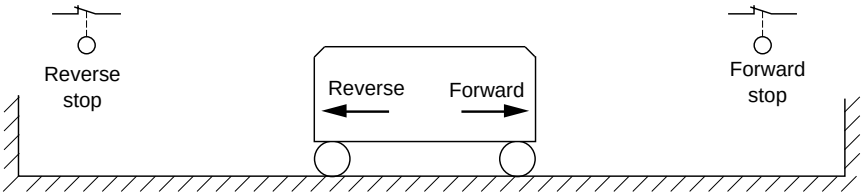

The stop is activated when the input is at 0 (contact open).

Buy: www.ValinOnline.com | Phone 844-385-3099 | Email: CustomerService@valin.com

Code	Name/Description	Adjustment range	Factory setting
LSt-	**[LIMIT SWITCHES]** **Note:** This function cannot be used with certain other functions. Follow the instructions on page 124.		
LAF	**[Stop FW limit sw.]**		[No] (nO)
nO	[No] (nO): Function inactive		
LI1	[LI1] (LI1) to [LI6] (LI6)		
-	[LI7] (LI7) to [LI10] (LI10): If MT-VW3A3201 logic I/O card has been inserted		
-	[LI11] (LI11) to [LI14] (LI14): If MT-VW3A3202 extended I/O card has been inserted		
C101	[C101] (C101) to [C115] (C115): With integrated Modbus in [I/O profile] (IO)		
-	[C201] (C201) to [C215] (C215): With integrated CANopen in [I/O profile] (IO)		
-	[C301] (C301) to [C315] (C315): With a communication card in [I/O profile] (IO)		
-	[C401] (C401) to [C415] (C415): Not applicable		
Cd00	[CD00] (Cd00) to [CD13] (Cd13): In [I/O profile] (IO) can be switched with possible logic inputs		
-	[CD14] (Cd14) to [CD15] (Cd15): In [I/O profile] (IO) can be switched without logic inputs		
LAr	**[Stop RV limit sw.]** Same assignments possible as for [Stop FW limit sw.] (LAF) below.		[No] (nO)
LAS	**[Stop type]**		[Freewheel] (nSt)
rMP	[Ramp stop] (rMP)		
FSt	[Fast stop] (FSt)		
nSt	[Freewheel] (nSt) When the assigned input changes to 0, the stop is controlled in accordance with the selected type. Restarting is only authorized for the other operating direction once the motor has stopped. If the two inputs [Stop FW limit sw.] (LAF) and [Stop RV limit sw.] (LAr) are assigned and at state 0, restarting will be impossible. The parameter can be accessed if [Stop FW limit sw.] (LAF) or [Stop RV limit sw.] (LAr) is assigned.		

Buy: www.ValinOnline.com | Phone 844-385-3099 | Email: CustomerService@valin.com

Brake logic control

Used to control an electromagnetic brake by the drive, for horizontal and vertical hoisting applications, and for unbalanced machines.

Principle:

Vertical hoisting movement:

Maintain motor torque in the driving load holding direction during brake opening and closing, in order to hold the load, start smoothly when the brake is released and stop smoothly when the brake is engaged.

Horizontal movement:

Synchronize brake release with the build-up of torque during startup and brake engage at zero speed on stopping, to prevent jolting.

Recommended settings for brake logic control for a vertical hoisting application:

⚠ WARNING

UNINTENDED EQUIPMENT OPERATION

Check that the selected settings and configurations will not result in the dropping or loss of control of the load being lifted.

Failure to follow these instructions can result in death or serious injury.

1. Brake impulse (bIP): YES. Ensure that the direction of rotation FW corresponds to lifting the load.
   For applications in which the load being lowered is very different from the load being lifted, set BIP = 2 Ibr (e.g., ascent always with a load and descent always without a load).
2. Brake release current (Ibr and Ird if BIP = 2 Ibr): Adjust the brake release current to the rated current indicated on the motor.
   During testing, adjust the brake release current in order to hold the load smoothly.
3. Acceleration time: For hoisting applications it is advisable to set the acceleration ramps to more than 0.5 seconds. Ensure that the drive does not exceed the current limit.
   The same recommendation applies for deceleration.
   Reminder: For a hoisting movement, a braking resistor should be used.
4. Brake release time (brt): Set according to the type of brake. It is the time required for the mechanical brake to release.
5. Brake release frequency (bIr), in open-loop mode only: Leave in [Auto], adjust if necessary.
6. Brake engage frequency (bEn): Leave in [Auto], adjust if necessary.
7. Brake engage time (bEt): Set according to the type of brake. It is the time required for the mechanical brake to engage.

Recommended settings for brake logic control for a horizontal hoisting application:

1. Brake impulse (bIP): No
2. Brake release current (Ibr): Set to 0.
3. Brake release time (brt): Set according to the type of brake. It is the time required for the mechanical brake to release.
4. Brake engage frequency (bEn), in open-loop mode only: Leave in [Auto], adjust if necessary.
5. Brake engage time (bEt): Set according to the type of brake. It is the time required for the mechanical brake to engage.

Buy: www.ValinOnline.com | Phone 844-385-3099 | Email: CustomerService@valin.com

Brake logic control, horizontal movement in open-loop mode

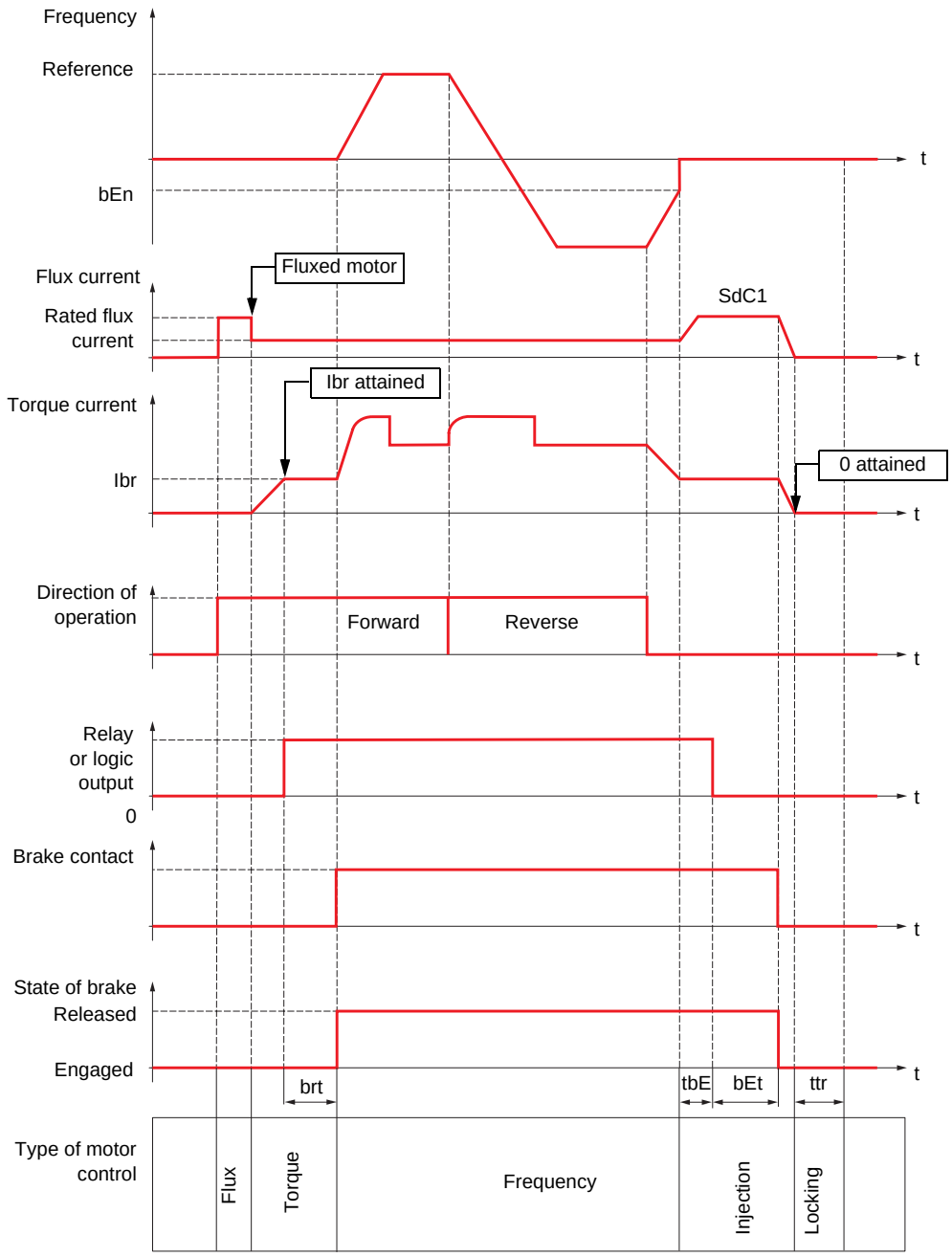

Key:
- (bEn): [Brake engage freq]
- (bEt): [Brake engage time]
- (brt): [Brake Release time]
- (Ibr): [Brake release I FW]
- (SdC1): [Auto DC inj. level 1]
- (tbE): [Brake engage delay]
- (ttr): [Time to restart]

Buy: www.ValinOnline.com | Phone 844-385-3099 | Email: CustomerService@valin.com

Handling

Lifts

Hoisting

Brake logic control, vertical movement in open-loop mode

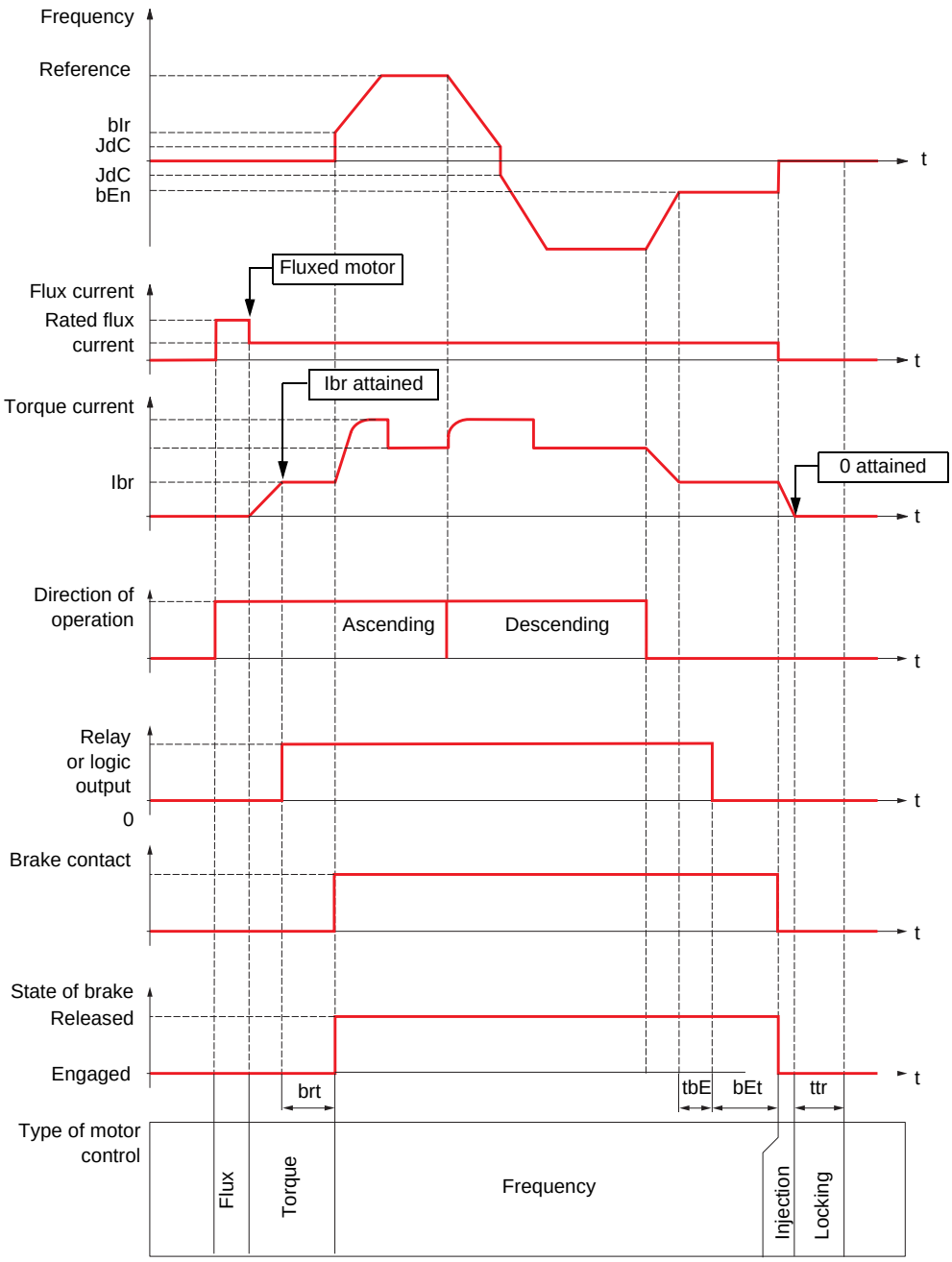

Key:
- (bEn): [Brake engage freq]
- (bEt): [Brake engage time]
- (bIr): [Brake release freq]
- (brt): [Brake Release time]
- (Ibr): [Brake release I FW]
- (JdC): [Jump at reversal]
- (tbE): [Brake engage delay]
- (ttr): [Time to restart]

Buy: www.ValinOnline.com | Phone 844-385-3099 | Email: CustomerService@valin.com

Brake logic control, vertical or horizontal movement in closed-loop mode

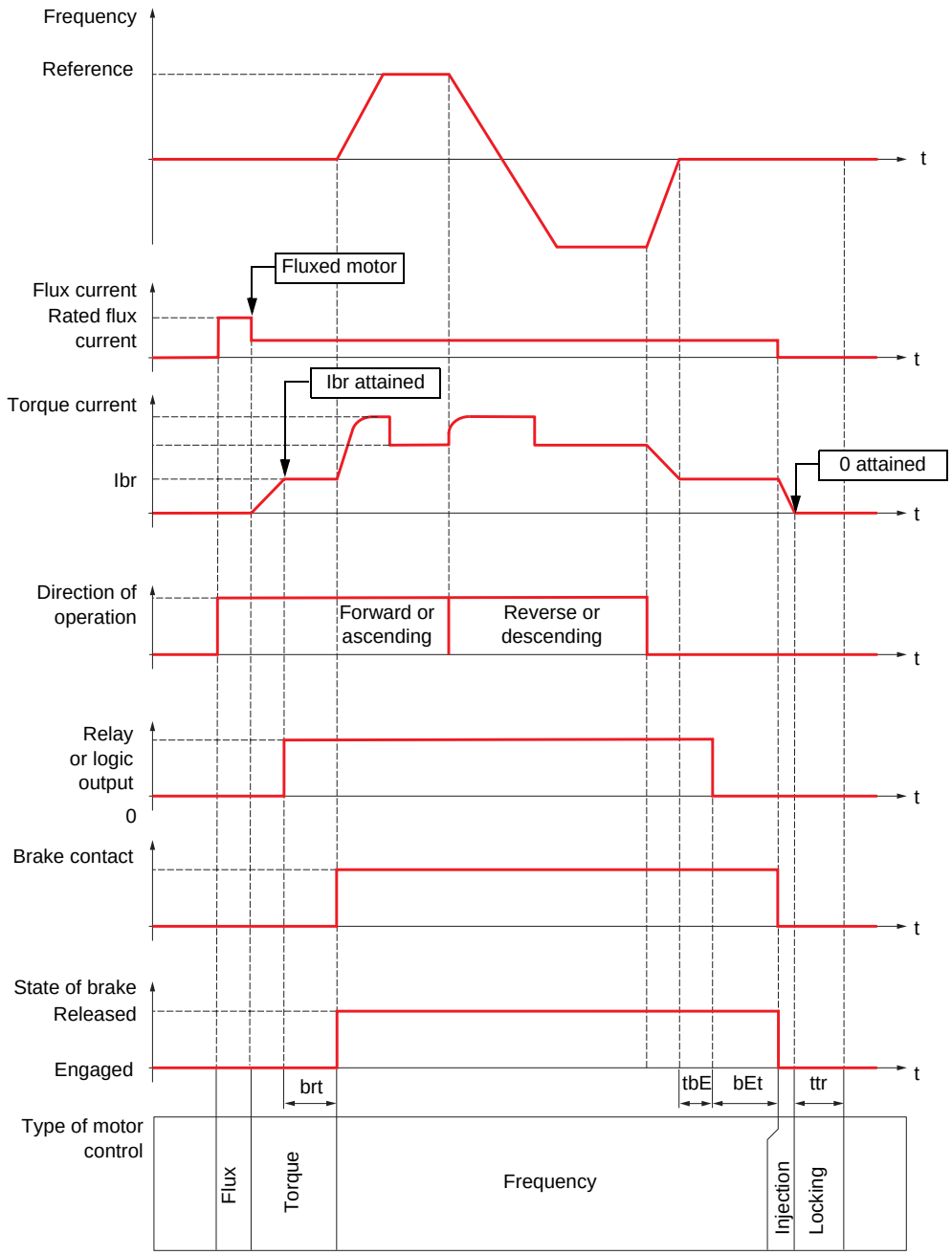

Key:
- (bEt): [Brake engage time]
- (brt): [Brake Release time]
- (Ibr): [Brake release I FW]
- (tbE): [Brake engage delay]
- (ttr): [Time to restart]

Buy: www.ValinOnline.com | Phone 844-385-3099 | Email: CustomerService@valin.com

Handling

Lifts

Hoisting

Code	Name/Description	Adjustment range	Factory setting
bLC-	**[BRAKE LOGIC CONTROL]** **Note:** This function cannot be used with certain other functions. Follow the instructions on page 124.		
bLC	**[Brake assignment]** **Note: If the brake is assigned, only a ramp stop is possible.** Check the [Type of stop] (Stt) page 134. Brake logic control can only be assigned if [Motor control type] (Ctt) page 66 = [SVC V] (UUC), [SVC I] (CUC) or [FVC] (FUC). Logic output or control relay nO ☐ **[No]** (nO): Function not assigned (in this case, none of the function parameters can be accessed). r2 ☐ **[R2]** (r2) - to r4 **[R4]** (r4): Relay (selection extended to R3 or R4 if one or two I/O cards have been inserted). LO1 **[LO1]** (LO1) - to LO4 **[LO4]** (LO4): Logic output (if one or two I/O cards have been inserted, LO1 to LO2 or LO4 can be selected). dO1 ☐ **[dO1]** (dO1): Analog output AO1 functioning as a logic output. Selection can be made if [AO1 assignment] (AO1) page 105 = [No] (nO).		[No] (nO)
bSt	**[Movement type]** HOr ☐ **[Traveling]** (HOr): Resistive-load movement (translational motion of overhead crane, for example). UEr ☐ **[Hoisting]** (UEr): Driving-load movement (hoisting winch, for example). If [Weight sensor ass.] (PES) page 160 is not [No] (nO) [Movement type] (bSt) is forced to [Hoisting] (UEr).		[Hoisting] (UEr)
bCI	**[Brake contact]** If the brake has a monitoring contact (closed for released brake). nO ☐ **[No]** (nO): Function inactive LI1 ☐ **[LI1]** (LI1) - : - : - ☐ **[...]** (...): See the assignment conditions on page 118.		[No] (nO)
bIP ↻	**[Brake impulse]** The parameter can be accessed if [Weight sensor ass.] (PES) = [No] (nO) (see page 160) and if [Movement type] (bSt) = [Hoisting] (UEr). nO ☐ **[No]** (nO): The motor torque is given in the required operating direction, at current Ibr. YES ☐ **[Yes]** (YES): The motor torque is always Forward (check that this direction corresponds to ascending), at current Ibr. 2Ibr ☐ **[2 IBR]** (2Ibr): The torque is in the required direction, at current Ibr for Forward and Ird for Reverse, for certain specific applications.		[No] (nO)
Ibr ↻	**[Brake release I FW]** (1) Brake release current threshold for ascending or forward movement The parameter can be accessed if [Weight sensor ass.] (PES) = [No] (nO) (see page 160).	0 to 1.32 In (2)	0
Ird ↻	**[Brake release I Rev]** (1) Brake release current threshold for descending or reverse movement The parameter can be accessed if [Brake impulse] (bIP) = [2 IBR] (2Ibr).	0 to 1.32 In (2)	0

(1) The parameter can also be accessed in the [1.3 SETTINGS] (SEt-)menu.
(2) In corresponds to the rated drive current indicated in the Installation Manual and on the drive nameplate.

↻ Parameter that can be modified during operation or when stopped.

Buy: www.ValinOnline.com | Phone 844-385-3099 | Email: CustomerService@valin.com

Code	Name/Description		Adjustment range	Factory setting
	[BRAKE LOGIC CONTROL] (continued)			
brt	**[Brake Release time]** Brake release time delay	(1)	0 to 5.00 s	0
blr	**[Brake release freq]** Brake release frequency threshold (initialization of acceleration ramp). The parameter can be accessed if [Motor control type] (Ctt) page 66 is not [FVC] (FUC) and if [Movement type] (bSt) page 154 is [Hoisting] (UEr). AUtO ☐ **[Auto]** (AUtO): The drive takes a value equal to the rated slip of the motor, calculated using the drive parameters. - ☐ **0 to 10 Hz**: Manual control	(1)		[Auto] (AUtO)
bEn	**[Brake engage freq]** Brake engage frequency threshold The parameter can be accessed if [Motor control type] (Ctt) page 66 is not [FVC] (FUC). AUtO ☐ **[Auto]** (AUtO): The drive takes a value equal to the rated slip of the motor, calculated using the drive parameters. - ☐ **0 to 10 Hz**: Manual control	(1)		[Auto] (AUtO)
bECd	**[Brake engage at 0]** Brake engages at regulated zero speed. The parameter can be accessed if [Motor control type] (Ctt) page 66 = [FVC] (FUC). Can be used to engage the brake at zero speed in closed-loop mode with speed regulation. This parameter can be used to adjust the brake engage delay once zero speed has been reached. If a speed other than zero is then required, the command to release the brake is sent following torque application. nO ☐ **[No]** (nO): Brake does not engage at regulated zero speed. - ☐ **0.0 to 30.0 s**: Brake engage delay once zero speed is reached.			[No] (nO)
tbE	**[Brake engage delay]** Time delay before request to engage brake. To delay brake engagement, if you wish the brake to be engaged when the drive comes to a complete stop.	(1)	0 to 5.00 s	0
bEt	**[Brake engage time]** Brake engage time (brake response time)	(1)	0 to 5.00 s	0
SdC1	**[Auto DC inj. level 1]** Level of standstill DC injection current. ☞ **Note:** The parameter can be accessed if [Motor control type] (Ctt) page 66 is not [FVC] (FUC) and if [Movement type] (bSt) page 154 is [Traveling] (HOr).	(1)	0 to 1.2 In (2)	0.7 In (2)

CAUTION

Check that the motor will withstand this current without overheating.
Failure to follow this instruction can result in equipment damage.

(1) The parameter can also be accessed in the [1.3 SETTINGS] (SEt-)menu.
(2) In corresponds to the rated drive current indicated in the Installation Manual and on the drive nameplate.

Parameter that can be modified during operation or when stopped.

Buy: www.ValinOnline.com | Phone 844-385-3099 | Email: CustomerService@valin.com

Code	Name/Description		Adjustment range	Factory setting
	[BRAKE LOGIC CONTROL] (continued)			
bEd	**[Engage at reversal]**			[No] (nO)
nO YES	☐ **[No]** (nO): The brake does not engage. ☐ **[Yes]** (YES): The brake engages. Can be used to select whether or not the brake engages on transition to zero speed when the operating direction is reversed.			
JdC	**[Jump at reversal]**	(1)	0 to 10.0 Hz	[Auto] (AUtO)
AUtO -	The parameter can be accessed if [Motor control type] (Ctt) page 66 is not [FVC] (FUC) and if [Movement type] (bSt) page 154 is [Hoisting] (UEr). ☐ **[Auto]** (AUtO): The drive takes a value equal to the rated slip of the motor, calculated using the drive parameters. ☐ **0 to 10 Hz**: Manual control When the reference direction is reversed, this parameter can be used to avoid loss of torque (and consequential release of load) on transition to zero speed. Parameter is not applicable if [Engage at reversal] (bEd) = [Yes] (YES).			
ttr	**[Time to restart]**	(1)	0 to 5.00 s	0
	Time between the end of a brake engage sequence and the start of a brake release sequence			

(1) The parameter can also be accessed in the [1.3 SETTINGS] (SEt-)menu.

Parameter that can be modified during operation or when stopped.

Buy: www.ValinOnline.com | Phone 844-385-3099 | Email: CustomerService@valin.com

Brake control logic expert parameters

Code	Name/Description	Adjustment range	Factory setting
brH0	❑ **[BRH b0]**		0

Selection of the brake restart sequence if a run command is repeated while the brake is engaging.

- 0 ☐ **[0]** (0): The engage/release sequence is executed in full.
- 1 ☐ **[1]** (1): The brake is released immediately.

Use in open-loop and closed-loop mode.

- A run command may be requested during the brake engagement phase. Whether or not the brake release sequence is executed depends on the value selected for [BRH b0] (brH0).

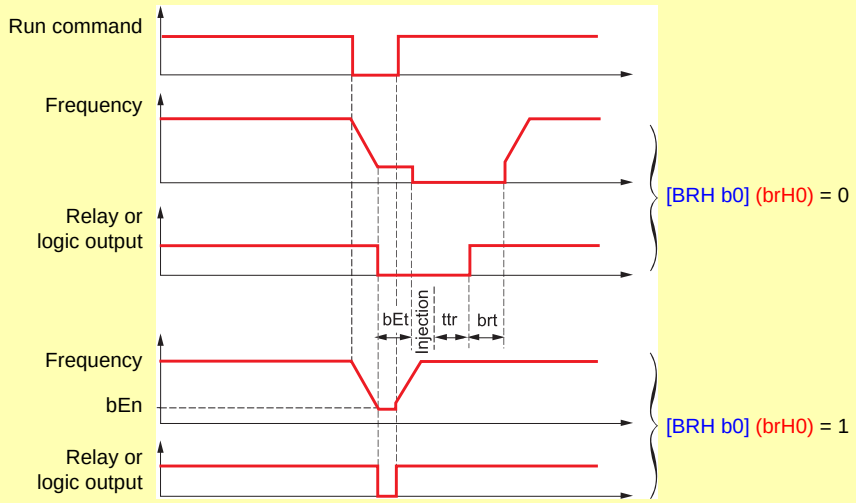

Note: If a run command is requested during the "ttr" phase, the complete brake control sequence is initialized.

brH1	❑ **[BRH b1]**		0

Deactivation of the brake contact in steady state fault.

- 0 ☐ **[0]** (0): The brake contact in steady state fault is active (fault if the contact is open during operation). The brF brake contact fault is monitored in all operating phases.
- 1 ☐ **[1]** (1): The brake contact in steady state fault is inactive. The brF brake contact fault is only monitored during the brake release and engage phases.

Buy: www.ValinOnline.com | Phone 844-385-3099 | Email: CustomerService@valin.com

Code	Name/Description	Adjustment range	Factory setting
brH2	❑ **[BRH b2]**		0

Taking the brake contact into account for the brake control sequence.

- 0 ☐ **[0]** (0): The brake contact is not taken into account.
- 1 ☐ **[1]** (1): The brake contact is taken into account.

Use in open-loop and closed-loop mode.

- If a logic input is assigned to the brake contact.
  [BRH b2] (brH2) = 0: During the brake release sequence, the reference is enabled at the end of the time [Brake Release time] (brt). During the brake engage sequence, the current changes to 0 according to the ramp [Current ramp time] (brr) at the end of the [Brake engage time] (bEt).
  [BRH b2] (brH2) = 1: When the brake is released, the reference is enabled when the logic input changes to 1. When the brake is engaged, the current changes to 0 according to the ramp [Current ramp time] (brr) when the logic input changes to 0.

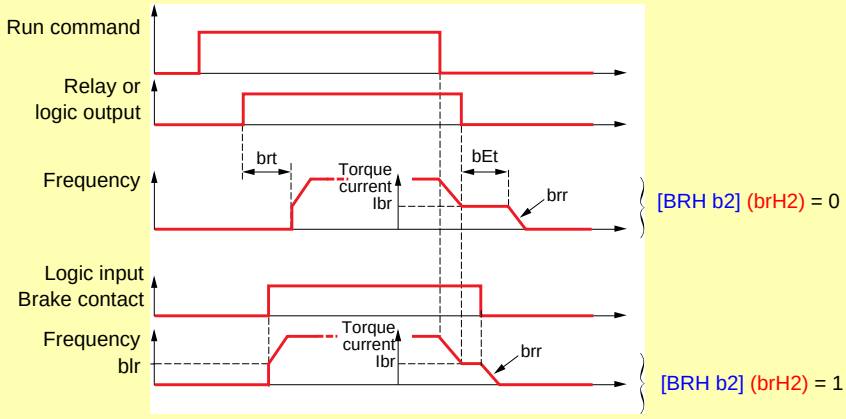

brH3	❑ **[BRH b3]**		0

In closed-loop mode only. Management of the absence of brake contact response, if it is assigned.

- 0 ☐ **[0]** (0): During the brake engage sequence, the brake contact must be open before the end of [Brake engage time] (bEt), otherwise the drive locks in a brF brake contact fault.
- 1 ☐ **[1]** (1): During the brake engage sequence, the brake contact must be open before the end of [Brake engage time] (bEt), otherwise a bCA brake contact alarm is triggered and zero speed is maintained.

brH4	❑ **[BRH_b4]**		0

In closed-loop mode only. Activation of the speed loop at zero if a movement for which no command has been given occurs (measurement of a speed greater than a fixed min. threshold).

- 0 ☐ **[0]** (0): No action in the event of a movement for which no command has been given.
- 1 ☐ **[1]** (1): If a movement occurs for which no command has been given, the drive switches to zero speed regulation, with no brake release command, and a bSA alarm is triggered.

brr	❑ **[Current ramp time]**	0 to 5.00 s	0 s

Torque current ramp time (increase and decrease) for a current variation equal to [Brake release I FW] (Ibr).

Parameter that can be modified during operation or when stopped.

Buy: www.ValinOnline.com | Phone 844-385-3099 | Email: CustomerService@valin.com

Load measurement

This function uses the information supplied by a weight sensor to adapt the current [Brake release I FW] (Ibr) of the [BRAKE LOGIC CONTROL] (bLC-) function. The signal from the weight sensor can be assigned to an analog input (usually a 4 - 20 mA signal), to the pulse-in input or to the encoder input, according to the type of weight sensor.

Examples:

- Measurement of the total weight of a hoisting winch and its load
- Measurement of the total weight of an elevator winch, the cabin and counterweight

The current [Brake release I FW] (Ibr) is adapted in accordance with the curve below.

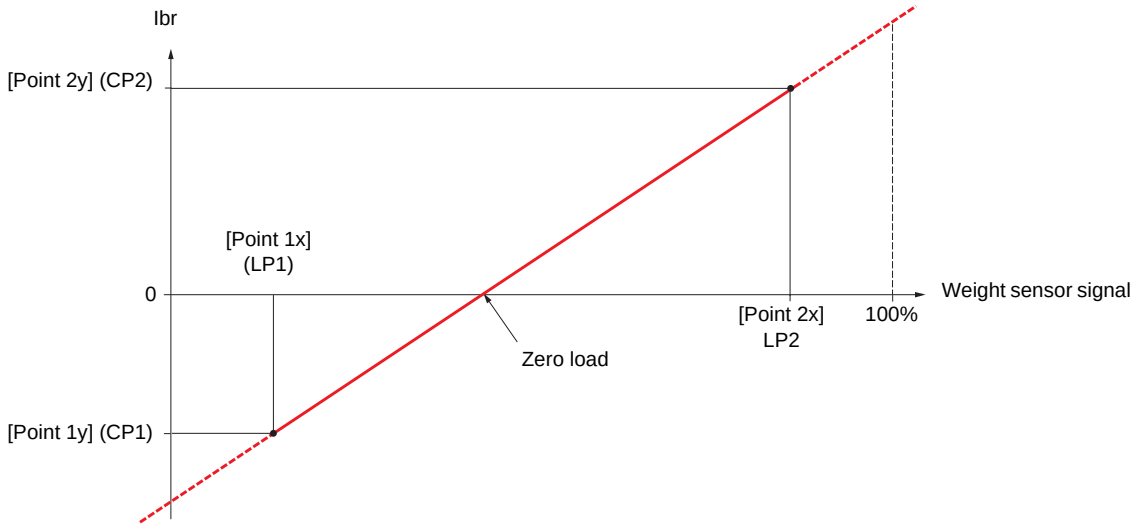

This curve can represent a weight sensor on an elevator winch, where zero load on the motor occurs when the load in the elevator is not zero.

Buy: www.ValinOnline.com | Phone 844-385-3099 | Email: CustomerService@valin.com

Code	Name/Description	Adjustment range	Factory setting
ELM-	**[EXTERNAL WEIGHT MEAS.]**		
PES	**[Weight sensor ass.]**		[No] (nO)

Function can be accessed if brake logic control is assigned (see page 154).
If [Weight sensor ass.] (PES) is not [No] (nO), [Movement type] (bSt) page 154 is forced to [Hoisting] (UEr).

- nO **[No]** (nO): Function inactive
- AI1 **[AI1]** (AI1): Analog input
- AI2 **[AI2]** (AI2): Analog input
- AI3 **[AI3]** (AI3): Analog input, if MT-VW3A3202 extension card has been inserted
- AI4 **[AI4]** (AI4): Analog input, if MT-VW3A3202 extension card has been inserted
- PI **[RP]** (PI): Frequency input, if MT-VW3A3202 extension card has been inserted
- PG **[Encoder]** (PG): Encoder input, if encoder card has been inserted
- AIU1 **[Network AI]** (AIU1): Virtual input via communication bus, to be configured via [AI net. channel] (AIC1) page 92.

⚠ WARNING

UNINTENDED EQUIPMENT OPERATION

If the equipment switches to forced local mode (see page 234), the virtual input remains fixed at the last value transmitted.
Do not use the virtual input and forced local mode in the same configuration.
Failure to follow these instructions can result in death or serious injury.

LP1	**[Point 1 X]**	0 to 99.99%	0

0 to 99.99% of signal on assigned input.
[Point 1x] (LP1) must be less than [Point 2x] (LP2).
The parameter can be accessed if [Weight sensor ass.] (PES) is assigned.

CP1	**[Point 1Y]**	-1.36 to +1.36 In (1)	- In

Current corresponding to load [Point 1 X] (LP1), in A.
The parameter can be accessed if [Weight sensor ass.] (PES) is assigned.

LP2	**[Point 2X]**	0.01 to 100%	50%

0.01 to 100% of signal on assigned input.
[Point 2x] (LP2) must be greater than [Point 1x] (LP1).
The parameter can be accessed if [Weight sensor ass.] (PES) is assigned.

CP2	**[Point 2Y]**	-1.36 to +1.36 In (1)	0

Current corresponding to load [Point 2x] (LP2), in A.
The parameter can be accessed if [Weight sensor ass.] (PES) is assigned.

IbrA	**[Ibr 4-20 mA loss]**	0 to 1.36 In (1)	0

Brake release current in the event of the loss of the weight sensor information.
This parameter can be accessed if the weight sensor is assigned to an analog current input and the 4-20 mA loss fault is deactivated.
Recommended settings:
- 0 for elevators
- Rated motor current for a hoisting application

(1) In corresponds to the rated drive current indicated in the Installation Manual and on the drive nameplate.

Parameter that can be modified during operation or when stopped.

Buy: www.ValinOnline.com | Phone 844-385-3099 | Email: CustomerService@valin.com

High-speed hoisting

This function can be used to optimize the cycle times for hoisting movements for zero or lightweight loads. It authorizes operation at "constant power" in order to reach a speed greater than the rated speed without exceeding the rated motor current.
The speed remains limited by the [High speed] (HSP) parameter, page 40.

The function acts on the speed reference pedestal and not on the reference itself.

Principle:

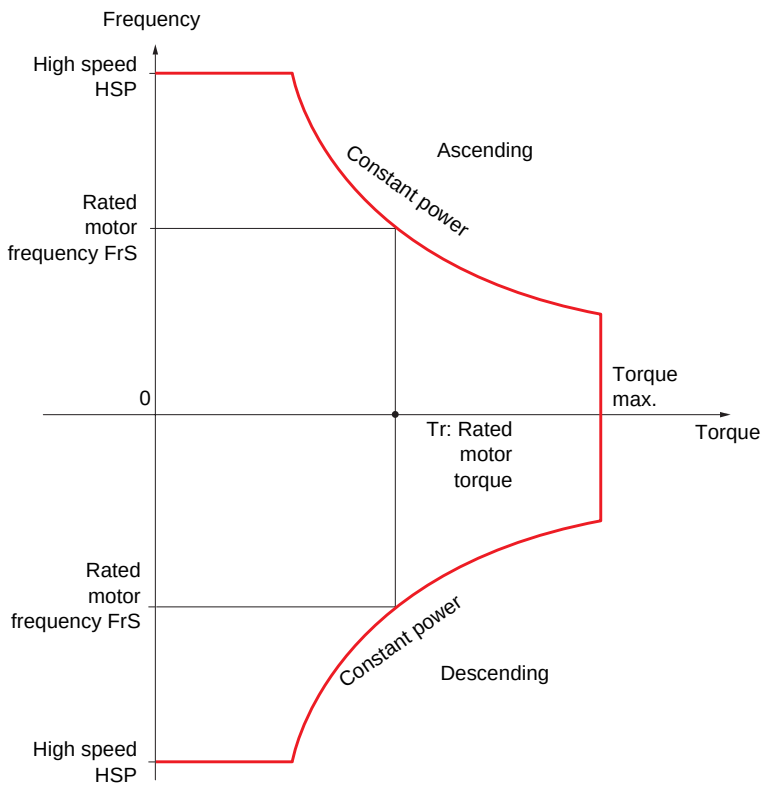

Buy: www.ValinOnline.com | Phone 844-385-3099 | Email: CustomerService@valin.com

There are 2 possible operating modes:

- "Speed reference" mode: The maximum permissible speed is calculated by the drive during a speed step that is set so that the drive can measure the load.
- "Current limitation" mode: The maximum permissible speed is the speed that supports current limitation in motor mode, in the "Ascending" direction only. For the "Descending" direction, operation is always in "Speed reference" mode.

Speed reference mode

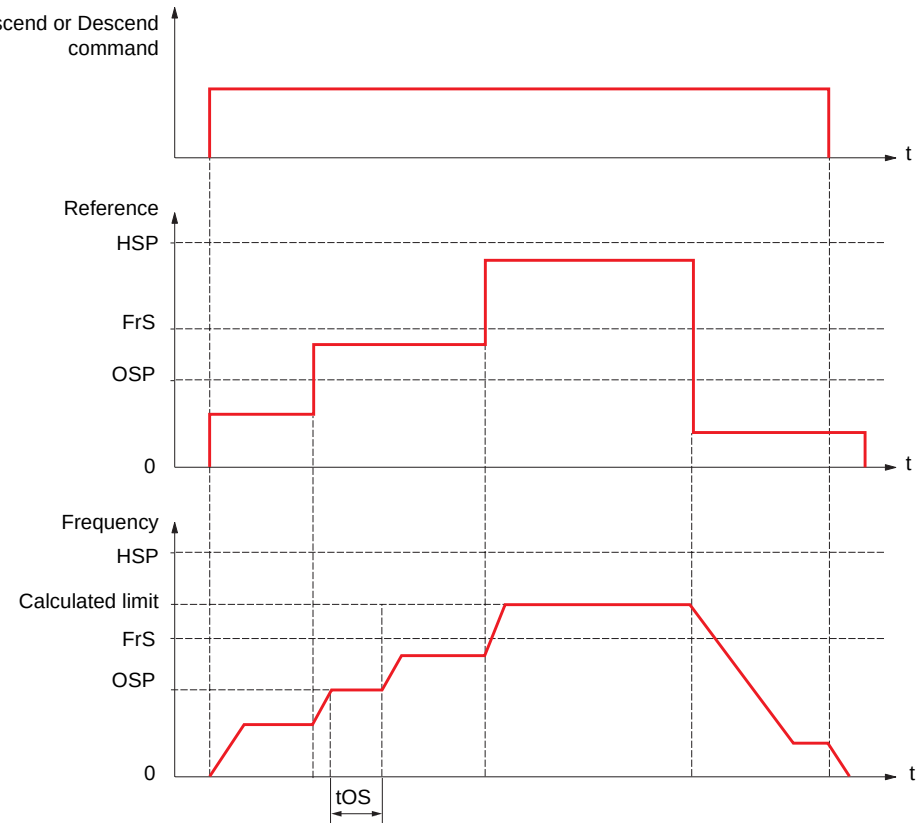

OSP: Adjustable speed step for load measurement
tOS: Load measuring time

Two parameters are used to reduce the speed calculated by the drive, for ascending and descending.

Buy: www.ValinOnline.com | Phone 844-385-3099 | Email: CustomerService@valin.com

Current limiting mode

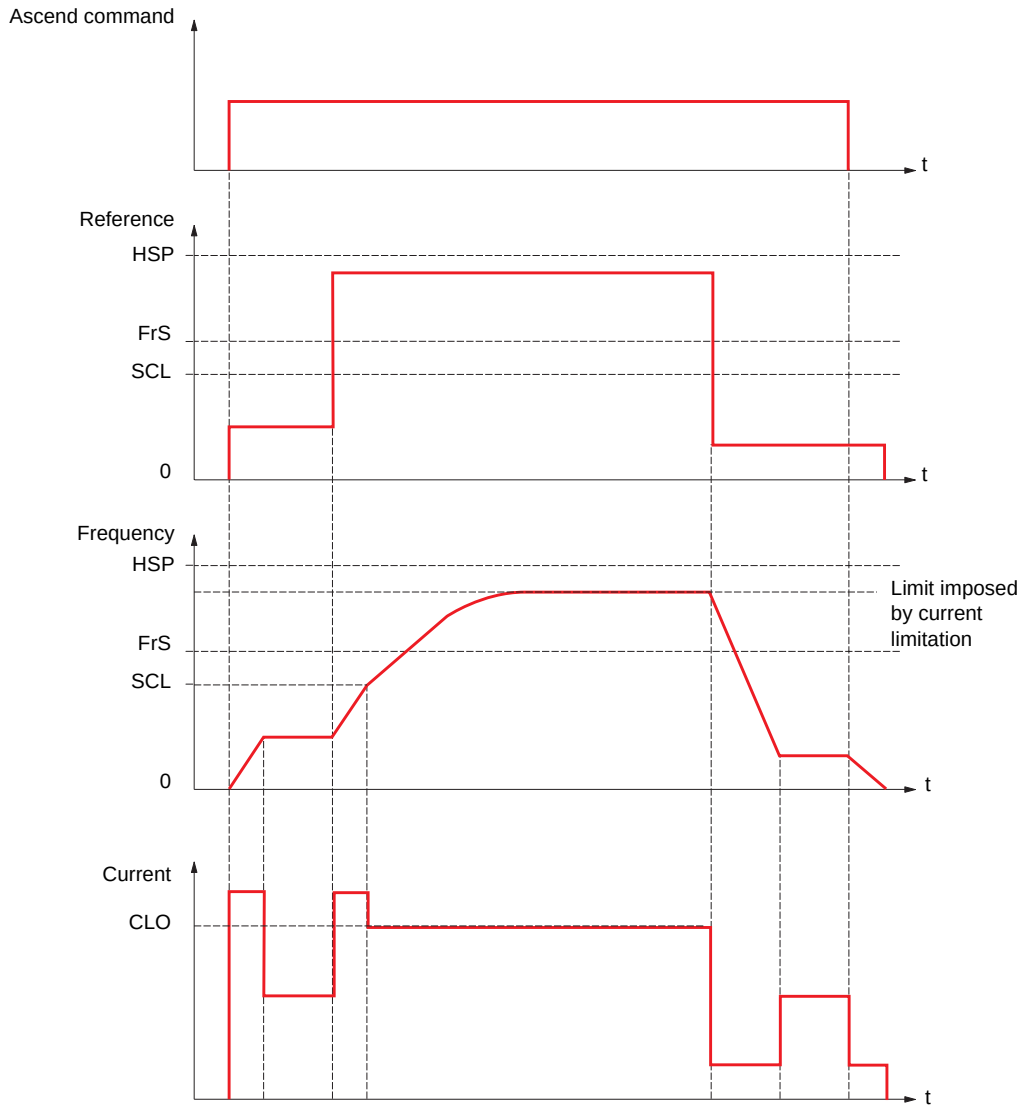

SCL: Adjustable speed threshold, above which current limitation is active
CLO: Current limitation for high-speed function

Buy: www.ValinOnline.com | Phone 844-385-3099 | Email: CustomerService@valin.com

Rope slack

The "rope slack" function can be used to prevent starting up at high speed when a load has been set down ready for lifting but the rope or cable is still slack (as illustrated below).

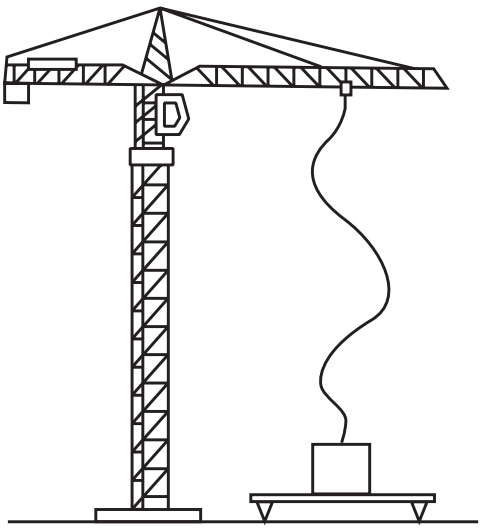

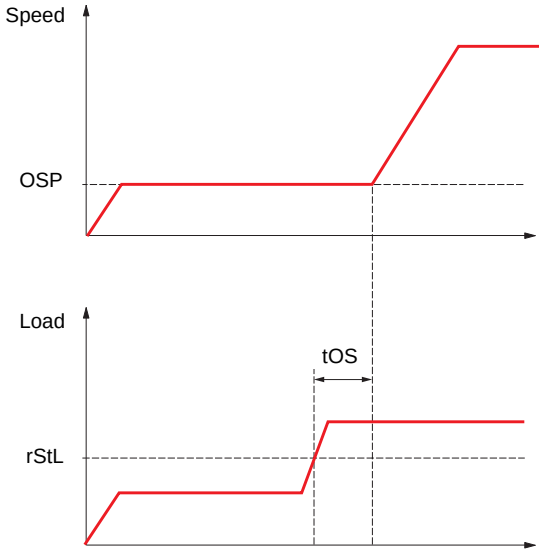

The speed step (OSP parameters) described on page 162 is used to measure the load. The effective measurement cycle will not be triggered until the load reaches the adjustable threshold rStL, which corresponds to the weight of the hook.

A logic output or a relay can be assigned to the indication of the "rope slack" state in the [1.5 INPUTS / OUTPUTS CFG] (I-O-) menu.

Buy: www.ValinOnline.com | Phone 844-385-3099 | Email: CustomerService@valin.com

Code	Name/Description	Adjustment range	Factory setting
HSH-	**[HIGH SPEED HOISTING]** **Note:** This function cannot be used with certain other functions. Follow the instructions on page 124.		
HSO nO SSO CSO	**[High speed hoisting]** ☐ **[No]** (nO): Function inactive ☐ **[Speed ref]** (SSO): "Speed reference" mode ☐ **[I Limit]** (CSO): "Current limitation" mode		[No] (nO)
COF ()	**[Motor speed coeff.]** Speed reduction coefficient calculated by the drive for Ascending direction. The parameter can be accessed if [High speed hoisting] (HSO) = [Speed ref] (SSO).	0 to 100%	100%
COr ()	**[Gen. speed coeff]** Speed reduction coefficient calculated by the drive for Descending direction. The parameter can be accessed if [High speed hoisting] (HSO) is not [No] (nO).	0 to 100%	50%
tOS ()	**[Load measuring tm.]** Duration of speed step for measurement. The parameter can be accessed if [High speed hoisting] (HSO) is not [No] (nO).	0.1 s to 65 s	0.5 s
OSP ()	**[Measurement spd]** Speed stabilized for measurement. The parameter can be accessed if [High speed hoisting] (HSO) is not [No] (nO).	0 to [Rated motor freq.] (FrS)	40 Hz
CLO ()	**[High speed I Limit]** Current limitation at high speed. The parameter can be accessed if [High speed hoisting] (HSO) = [I Limit] (CSO). The adjustment range is limited to 1.36 In if [Switching freq.](SFr) page 56 is less than 2 kHz. **Note:** If the setting is less than 0.25 In, the drive may lock in [Output Phase Loss] (OPF) fault mode if this has been enabled (see page 214).	0 to 1.65 In (1)	In
SCL ()	**[I Limit. frequency]** Frequency threshold, above which the high-speed limitation current is active. The parameter can be accessed if [High speed hoisting] (HSO) = [I Limit] (CSO)	0 to 500 or 1600 Hz according to rating	40 Hz
rSd nO drI PES	**[Rope slack config.]** Rope slack function. The parameter can be accessed if [High speed hoisting] (HSO) is not [No] (nO). ☐ **[No]** (nO): Function inactive ☐ **[Drive estim.]** (drI): Measurement of the load by estimating the torque generated by the drive. ☐ **[Ext. sensor]** (PES): Measurement of the load using a weight sensor, can only be assigned if [Weight sensor ass.] (PES) page 160 is not [No] (nO).		[No] (nO)
rStL	**[Rope slack trq level]** Adjustment threshold corresponding to a load weighing slightly less than the hook when off-load, as a % of the rated load. The parameter can be accessed if [Rope slack trq level] (rSd) has been assigned.	0 to 100%	0%

(1) In corresponds to the rated drive current indicated in the Installation Manual and on the drive nameplate.

() Parameter that can be modified during operation or when stopped.

Buy: www.ValinOnline.com | Phone 844-385-3099 | Email: CustomerService@valin.com

PID regulator

Block diagram

The function is activated by assigning an analog input to the PID feedback (measurement).

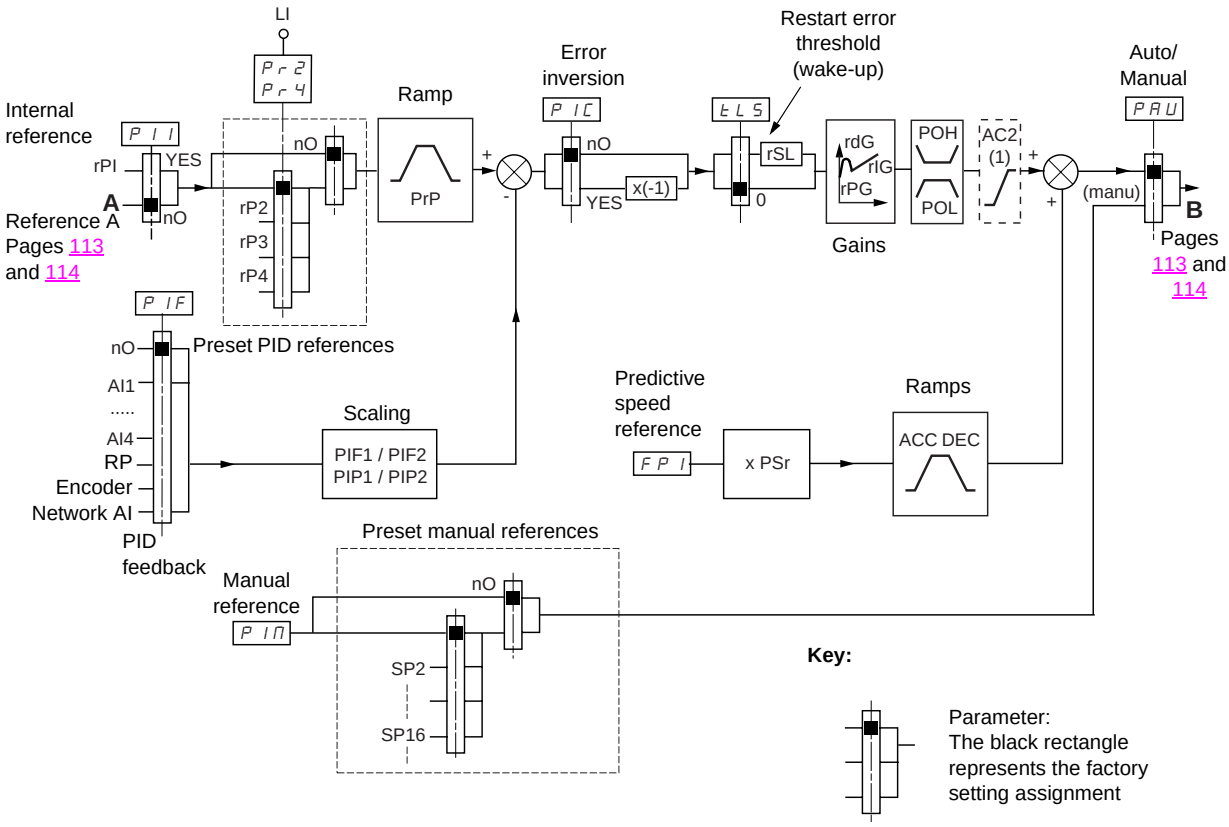

(1) Ramp AC2 is only active when the PID function starts up and during PID "wake-ups".

PID feedback:
The PID feedback must be assigned to one of the analog inputs AI1 to AI4, to the frequency input or the encoder, according to whether any extension cards have been inserted.

PID reference:
The PID reference must be assigned to the following parameters:

- Preset references via logic inputs (rP2, rP3, rP4)
- In accordance with the configuration of [Act. internal PID ref.] (PII) pages 170:
  - Internal reference (rPI) or
  - Reference A (Fr1 or Fr1b, see page 113)

Combination table for preset PID references

LI (Pr4)	LI (Pr2)	Pr2 = nO	Reference
			rPI or A
0	0		rPI or A
0	1		rP2
1	0		rP3
1	1		rP4

A predictive speed reference can be used to initialize the speed on restarting the process.

Buy: www.ValinOnline.com | Phone 844-385-3099 | Email: CustomerService@valin.com

Scaling of feedback and references:

- PIF1, PIF2 parameters
  Can be used to scale the PID feedback (sensor range).
  This scale MUST be maintained for all other parameters.

- PIP1, PIP2 parameters
  Can be used to scale the adjustment range, i.e., the reference. **The adjustment range MUST lie within the sensor range.**

  The maximum value of the scaling parameters is 32767. To facilitate installation, we recommend using values as close as possible to this maximum level, while retaining powers of 10 in relation to the actual values.

  Example (see graph below): Adjustment of the volume in a tank, between 6 m^3 and 15 m^3.
  - Sensor used 4-20 mA, 4.5 m^3 for 4 mA, 20 m^3 for 20 mA, with the result that PIF1 = 4500 and PIF2 = 20000.
  - Adjustment range 6 to 15 m^3, with the result that PIP1 = 6000 (min. reference) and PIP2 = 15000 (max. reference).
  - Example references:
    - rP1 (internal reference) = 9500
    - rp2 (preset reference) = 6500
    - rP3 (preset reference) = 8000
    - rP4 (preset reference) = 11200

  The [DISPLAY CONFIG.] menu can be used to customize the name of the unit displayed and its format.

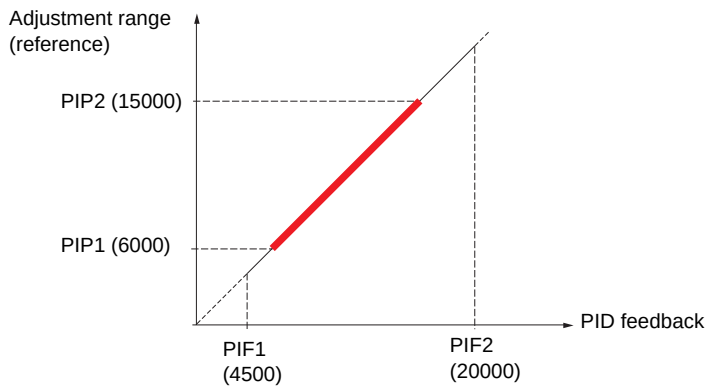

Other parameters:

- rSL parameter:
  Can be used to set the PID error threshold, above which the PID regulator will be reactivated (wake-up) after a stop due to the max. time threshold being exceeded at low speed (tLS).

- Reversal of the direction of correction (PIC): If PIC = nO, the speed of the motor will increase when the error is positive, for example: pressure control with a compressor. If PIC = YES, the speed of the motor will decrease when the error is positive, for example: temperature control using a cooling fan.

- The integral gain may be short-circuited by a logic input.

- An alarm on the PID feedback may be configured and indicated by a logic output.

- An alarm on the PID error may be configured and indicated by a logic output.

Buy: www.ValinOnline.com | Phone 844-385-3099 | Email: CustomerService@valin.com

"Manual - Automatic" operation with PID

This function combines the PID regulator, the preset speeds and a manual reference. Depending on the state of the logic input, the speed reference is given by the preset speeds or by a manual reference input via the PID function.

Manual reference (PIM)

- Analog inputs AI1 to AI4
- Frequency input
- Encoder

Predictive speed reference (FPI)

- [AI1] (AI1): Analog input
- [AI2] (AI2): Analog input
- [AI3] (AI3): Analog input, if MT-VW3A3202 extension card has been inserted
- [AI4] (AI4): Analog input, if MT-VW3A3202 extension card has been inserted
- [RP] (PI): Frequency input, if MT-VW3A3202 extension card has been inserted
- [Encoder] (PG): Encoder input, if encoder card has been inserted
- [HMI] (LCC): Graphic display keypad
- [Modbus] (Mdb): Integrated Modbus
- [CANopen] (CAn): Integrated CANopen
- [Com. card] (nEt): Communication card (if inserted)

Setting up the PID regulator

1. **Configuration in PID mode**
   See the diagram on page 166.

2. **Perform a test in factory settings mode (in most cases, this will be sufficient).**
   To optimize the drive, adjust rPG or rIG gradually and independently and observe the effect on the PID feedback in relation to the reference.

3. **If the factory settings are unstable or the reference is incorrect**

   - Perform a test with a speed reference in Manual mode (without PID regulator) and with the drive on load for the speed range of the system:
     - In steady state, the speed must be stable and comply with the reference and the PID feedback signal must be stable.
     - In transient state, the speed must follow the ramp and stabilize quickly, and the PID feedback must follow the speed.
     If this is not the case, see the settings for the drive and/or sensor signal and wiring.

   - Switch to PID mode.
   - Set brA to no (no auto-adaptation of the ramp).
   - Set the PID ramp (PrP) to the minimum permitted by the mechanism without triggering an ObF fault.
   - Set the integral gain (rIG) to minimum.
   - Leave the derivative gain (rdG) at 0.
   - Observe the PID feedback and the reference.
   - Switch the drive ON/OFF a number of times or vary the load or reference rapidly a number of times.
   - Set the proportional gain (rPG) in order to ascertain the best compromise between response time and stability in transient phases (slight overshoot and 1 to 2 oscillations before stabilizing).
   - If the reference varies from the preset value in steady state, gradually increase the integral gain (rIG), reduce the proportional gain (rPG) in the event of instability (pump applications), find a compromise between response time and static precision (see diagram).
   - Lastly, the derivative gain may permit the overshoot to be reduced and the response time to be improved, although this will make it more difficult to obtain a compromise in terms of stability, as it depends on 3 gains.
   - Perform in-production tests over the whole reference range.

Buy: www.ValinOnline.com | Phone 844-385-3099 | Email: CustomerService@valin.com

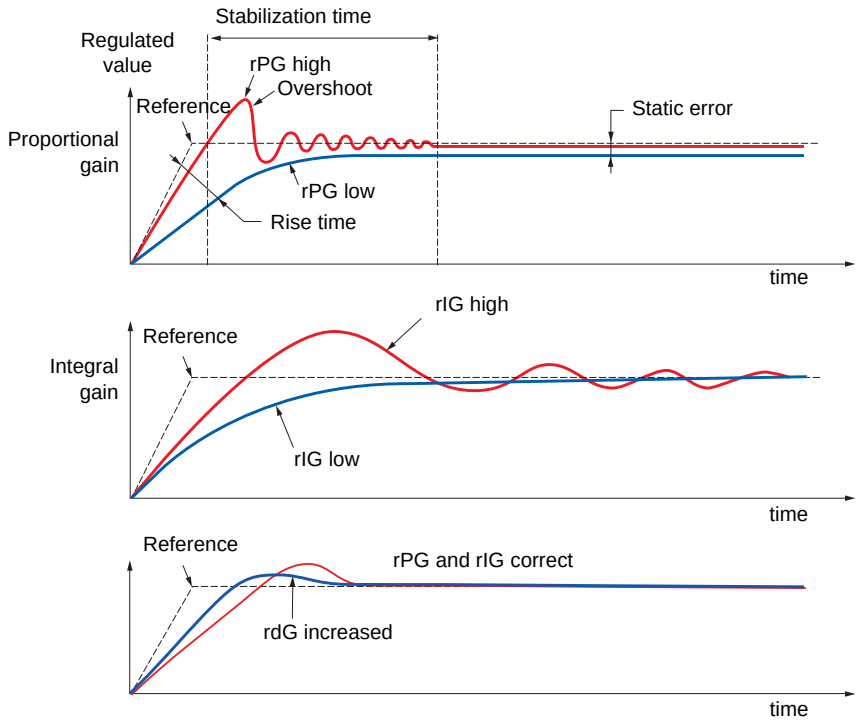

The oscillation frequency depends on the system dynamics.

Parameter	Rise time	Overshoot	Stabilization time	Static error
rPG ↗	↘↘	↗	=	↘
rIG ↗	↘	↗↗	↗	↘↘
rdG ↗	=	↘	↘	=

Buy: www.ValinOnline.com | Phone 844-385-3099 | Email: CustomerService@valin.com

Code	Name/Description	Adjustment range	Factory setting
PId-	**[PID REGULATOR]** **Note:** This function cannot be used with certain other functions. Follow the instructions on page 124.		
PIF nO AI1 AI2 AI3 AI4 PI PG AIU1	**[PID feedback ass.]** ☐ **[No]** (nO): Not assigned (function inactive) In this case, none of the function parameters can be accessed. ☐ **[AI1]** (AI1): Analog input ☐ **[AI2]** (AI2): Analog input ☐ **[AI3]** (AI3): Analog input, if MT-VW3A3202 extension card has been inserted ☐ **[AI4]** (AI4): Analog input, if MT-VW3A3202 extension card has been inserted ☐ **[RP]** (PI): Frequency input, if MT-VW3A3202 extension card has been inserted ☐ **[Encoder]** (PG): Encoder input, if encoder card has been inserted ☐ **[Network AI]** (AIU1): Virtual input via communication bus **Note:** If the equipment switches to forced local mode (see page 234), the virtual input remains fixed at the last value transmitted.		[No] (nO)
AIC1 nO Mdb CAn nEt APP	**[AI net. channel]** The parameter can be accessed if [PID feedback ass.] (PIF) = [Network AI] (AIU1). This parameter can also be accessed in the [1.5 INPUTS / OUTPUTS CFG] (I-O-) menu. ☐ **[No]** (nO): **Not assigned** ☐ **[Modbus]** (Mdb): Integrated Modbus ☐ **[CANopen]** (CAn): Integrated CANopen ☐ **[Com. card]** (nEt): Communication card (if inserted) ☐ **[C.Insid. card]** (APP): Not applicable		[No] (nO)
PIF1 ( )	**[Min PID feedback]** (1) Value for minimum feedback. Adjustment range from 0 to [Max PID feedback] (PIF2) (2).		100
PIF2 ( )	**[Max PID feedback]** (1) Value for maximum feedback Adjustment range from [Min PID feedback] (PIF1) to 32767 (2).		1000
PIP1 ( )	**[Min PID reference]** (1) Minimum process value. Adjustment range from [Min PID feedback] (PIF1) to [Max PID reference] (PIP2) (2).		150
PIP2	**[Max PID reference]** (1) Maximum process value Adjustment range from [Min PID reference] (PIP1) to [Max PID feedback] (PIF2) (2).		900
PII nO YES	**[Act. internal PID ref.]** Internal PID regulator reference ☐ **[No]** (nO): The PID regulator reference is given by Fr1 or Fr1b with summing/subtraction/multiplication functions (see the diagram on page 112). ☐ **[Yes]** (YES): The PID regulator reference is internal via parameter rPI.		[No] (nO)
rPI ( )	**[Internal PID ref.]** Internal PID regulator reference This parameter can also be accessed in the [1.2 MONITORING] (SUP-) menu. Adjustment range from [Min PID reference] (PIP1) to [Max PID reference] (PIP2) (2).		150
rPG ( )	**[PID prop. gain]** Proportional gain	0.01 to 100	1

(1) The parameter can also be accessed in the [1.3 SETTINGS] (SEt-)menu.
(2) If a graphic display keypad is not in use, values greater than 9999 will be displayed on the 4-digit display with a period mark after the thousand digit, e.g., 15.65 for 15650.

( ) Parameter that can be modified during operation or when stopped.

Buy: www.ValinOnline.com | Phone 844-385-3099 | Email: CustomerService@valin.com

Code	Name/Description	Adjustment range	Factory setting
	[PID REGULATOR] (continued)		
rIG	**[PID integral gain]** Integral gain	0.01 to 100	1
rdG	**[PID derivative gain]** Derivative gain	0.00 to 100	0
PrP	**[PID ramp]** (1) PID acceleration/deceleration ramp, defined to go from [Min PID reference] (PIP1) to [Max PID reference] (PIP2) and vice versa.	0 to 99.9 s	0 s
PIC nO YES	**[PID correct. reverse]** ☐ **[No]** (nO) ☐ **[Yes]** (YES) Reversal of the direction of correction (PIC): If PIC = nO, the speed of the motor will increase when the error is positive. Example: pressure control with a compressor. If PIC = YES, the speed of the motor will decrease when the error is positive. Example: temperature control using a cooling fan.		[No] (nO)
POL	**[Min PID output]** (1) Minimum value of regulator output in Hz	- 500 to 500 or -1600 to 1600 according to rating	0 Hz
POH	**[Max PID output]** (1) Maximum value of regulator output in Hz	0 to 500 or 1600 according to rating	60 Hz
PAL	**[Min fbk alarm]** (1) Minimum monitoring threshold for regulator feedback Adjustment range from [Min PID feedback] (PIF1) to [Max PID feedback] (PIF2) (2).		100
PAH	**[Max fbk alarm]** (1) Maximum monitoring threshold for regulator feedback Adjustment range from [Min PID feedback] (PIF1) to [Max PID feedback] (PIF2) (2).		1000
PEr	**[PID error Alarm]** (1) Regulator error monitoring threshold	0 to 65535 (2)	100
PIS nO LI1 - - -	**[PID integral reset]** ☐ **[No]** (nO): Function inactive ☐ **[LI1]** (LI1) : : ☐ **[...]** (...): See the assignment conditions on page 118. If the assigned input or bit is at 0, the function is inactive (the PID integral is enabled). If the assigned input or bit is at 1, the function is active (the PID integral is disabled).		[No] (nO)

(1) The parameter can also be accessed in the [1.3 SETTINGS] (SEt-)menu.
(2) If a graphic display keypad is not in use, values greater than 9999 will be displayed on the 4-digit display with a period mark after the thousand digit,
e.g., 15.65 for 15650.

Parameter that can be modified during operation or when stopped.

Buy: www.ValinOnline.com | Phone 844-385-3099 | Email: CustomerService@valin.com

Code	Name/Description	Adjustment range	Factory setting
	[PID REGULATOR] (continued)		
FPI	**[Speed ref. assign.]** PID regulator predictive speed input ☐ **[No]** (nO): Not assigned (function inactive) ☐ **[AI1]** (AI1): Analog input ☐ **[AI2]** (AI2): Analog input ☐ **[AI3]** (AI3): Analog input, if MT-VW3A3202 extension card has been inserted ☐ **[AI4]** (AI4): Analog input, if MT-VW3A3202 extension card has been inserted ☐ **[HMI]** (LCC): Graphic display terminal ☐ **[Modbus]** (Mdb): Integrated Modbus ☐ **[CANopen]** (CAn): Integrated CANopen ☐ **[Com. card]** (nEt): Communication card (if inserted) ☐ **[C.Insid. card]** (APP): Not applicable ☐ **[RP]** (PI): Frequency input, if MT-VW3A3202 extension card has been inserted ☐ **[Encoder]** (PG): Encoder input, if encoder card has been inserted		[No] (nO)
PSr	**[Speed input %]** (1) Multiplying coefficient for predictive speed input. The parameter cannot be accessed if [Speed ref. assign.] (FPI) = [No] (nO).	1 to 100%	100%
PAU	**[Auto/Manual assign.]** ☐ **[No]** (nO): The PID is always active. ☐ **[LI1]** (LI1) : : ☐ **[...]** (...): See the assignment conditions on page 118. If the assigned input or bit is at 0, the PID is active. If the assigned input or bit is at 1, manual operation is active.		[No] (nO)
AC2	**[Acceleration 2]** (1) Time to accelerate from 0 to the [Rated motor freq.] (FrS). Make sure that this value is compatible with the inertia being driven. Ramp AC2 is only active when the PID function starts up and during PID "wake-ups".	0.01 to 6000 s (3)	5.0 s
PIM	**[Manual reference]** Manual speed input. The parameter can be accessed if [Auto/Manual assign.] (PAU) is not [No] (nO). ☐ **[No]** (nO): Not assigned (function inactive) ☐ **[AI1]** (AI1): Analog input ☐ **[AI2]** (AI2): Analog input ☐ **[AI3]** (AI3): Analog input, if MT-VW3A3202 extension card has been inserted ☐ **[AI4]** (AI4): Analog input, if MT-VW3A3202 extension card has been inserted ☐ **[RP]** (PI): Frequency input, if MT-VW3A3202 extension card has been inserted ☐ **[Encoder]** (PG): Encoder input, if encoder card has been inserted The preset speeds are active on the manual reference if they have been configured.		[No] (nO)

(1) The parameter can also be accessed in the [1.3 SETTINGS] (SEt-)menu.
(2) If a graphic keypad is not in use, values greater than 9999 will be displayed on the 4-digit display with a period mark after the thousand digit,
e.g., 15.65 for 15650.
(3) Range 0.01 to 99.99 s or 0.1 to 999.9 s or 1 to 6000 s according to [Ramp increment] (Inr) page 131.

Parameter that can be modified during operation or when stopped.

Buy: www.ValinOnline.com | Phone 844-385-3099 | Email: CustomerService@valin.com

Code	Name/Description	Adjustment range	Factory setting
	[PID REGULATOR] (continued)		
tLS	**[Low speed time out]** (1) Maximum operating time at [Low speed] (LSP) (see page 40) Following operation at LSP for a defined period, a motor stop is requested automatically. The motor restarts if the reference is greater than LSP and if a run command is still present. Caution: Value 0 corresponds to an unlimited period. **Note:** If [Low speed time out] (tLS) is not 0, [Type of stop] (Stt) page 134 is forced to [Ramp stop] (rMP) (only if a ramp stop can be configured).	0 to 999.9 s	0 s
rSL	**[PID wake up thresh.]** If the "PID" and "Low speed operating time" tLS functions are configured at the same time, the PID regulator may attempt to set a speed lower than LSP. This results in unsatisfactory operation, which consists of starting, operating at low speed then stopping, and so on… Parameter rSL (restart error threshold) can be used to set a minimum PID error threshold for restarting after a stop at prolonged LSP. The function is inactive if tLS = 0 or if rSL = 0. **WARNING** **UNINTENDED EQUIPMENT OPERATION** Check that unintended restarts will not present any danger. **Failure to follow these instructions can result in death or serious injury.**	0.0 to 100.0	0

(1) The parameter can also be accessed in the [1.3 SETTINGS] (SEt-)menu.

Parameter that can be modified during operation or when stopped.

Buy: www.ValinOnline.com | Phone 844-385-3099 | Email: CustomerService@valin.com

Code	Name/Description	Adjustment range	Factory setting
Pr1-	**[PID PRESET REFERENCES]** Function can be accessed if [PID feedback ass.] (PIF) is assigned.		
Pr2 nO LI1 - - -	**[2 preset PID ref.]** ☐ **[No]** (nO): Function inactive ☐ **[LI1]** (LI1) : : ☐ **[...]** (...): See the assignment conditions on page 118. If the assigned input or bit is at 0, the function is inactive. If the assigned input or bit is at 1, the function is active.		[No] (nO)
Pr4 nO LI1 - - -	**[4 preset PID ref.]** Make sure that [2 preset PID ref.] (Pr2) has been assigned before assigning this function. ☐ **[No]** (nO): Function inactive ☐ **[LI1]** (LI1) : : ☐ **[...]** (...): See the assignment conditions on page 118. If the assigned input or bit is at 0, the function is inactive. If the assigned input or bit is at 1, the function is active.		[No] (nO)
rP2 ( )	**[2 preset PID ref.]** The parameter can be accessed if [Preset ref. PID 2] (Pr2) is assigned. Adjustment range from [Min PID reference] (PIP1) to [Max PID reference] (PIP2) (2).	(1)	300
rP3 ( )	**[3 preset PID ref.]** The parameter can be accessed if [Preset ref. PID 4] (Pr4) is assigned. Adjustment range from [Min PID reference] (PIP1) to [Max PID reference] (PIP2) (2).	(1)	600
rP4 ( )	**[4 preset PID ref.]** The parameter can be accessed if [Preset ref. PID 4] (Pr4) is assigned. Adjustment range from [Min PID reference] (PIP1) to [Max PID reference] (PIP2) (2).	(1)	900

(1) The parameter can also be accessed in the [1.3 SETTINGS] (SEt-)menu.
(2) If a graphic display keypad is not in use, values greater than 9999 will be displayed on the 4-digit display with a period mark after the thousand digit, e.g., 15.65 for 15650.

( ) Parameter that can be modified during operation or when stopped.

Buy: www.ValinOnline.com | Phone 844-385-3099 | Email: CustomerService@valin.com

Torque regulation

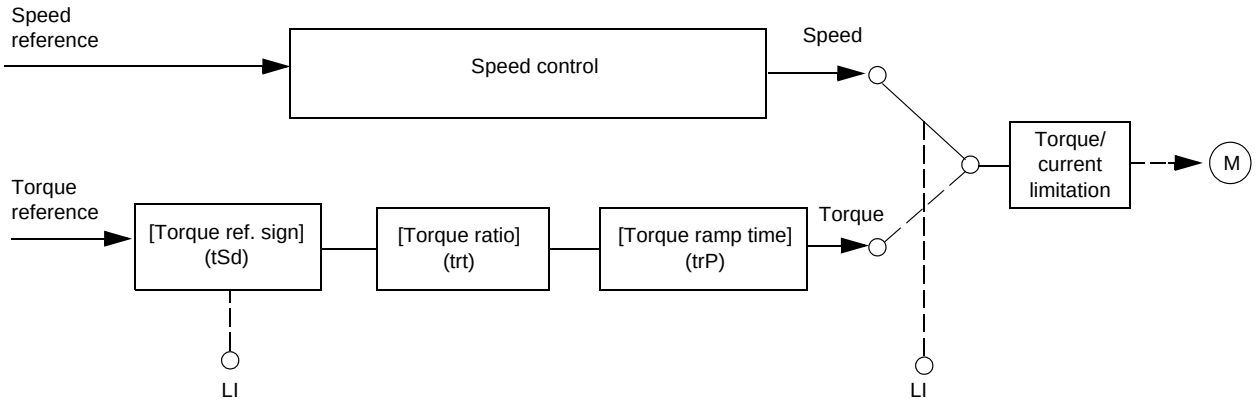

The function can be used to switch between operation in speed regulation mode and operation in torque control mode.
In torque control mode, the speed may vary within a configurable "deadband". When it reaches a lower or upper limit, the drive automatically reverts to speed regulation mode (fallback) and remains at this limit speed. The regulated torque is therefore no longer maintained and two scenarios may occur.

- If the torque returns to the required value, the drive will return to torque control mode.
- If the torque does not return to the required value at the end of a configurable period of time, the drive will switch to fault or alarm mode.

⚠ WARNING

UNINTENDED EQUIPMENT OPERATION

Check that the changes in the behavior of the motor do not present any danger.

Failure to follow these instructions can result in death or serious injury.

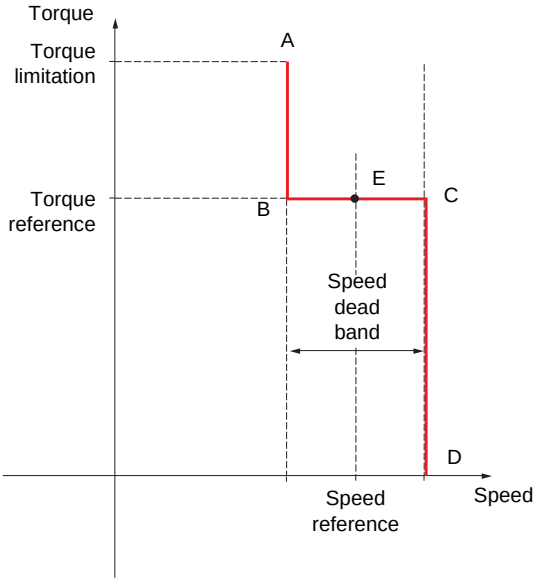

- AB and CD: "Fallback" to speed regulation
- BC: Torque control zone
- E: Ideal operating point

The torque sign and value can be transmitted via a logic output and an analog output.

Buy: www.ValinOnline.com | Phone 844-385-3099 | Email: CustomerService@valin.com

Code	Name/Description	Adjustment range	Factory setting
tOr-	**[TORQUE CONTROL]** This function can only be accessed for [Motor control type] (Ctt) = [SVC I] (CUC) or [FVC] (FUC). **Note:** This function cannot be used with certain other functions. Follow the instructions on page 124.		
tSS nO YES LI1 - - -	**[Trq/spd switching]** ☐ **[No]** (nO): Function inactive, thereby preventing access to other parameters. ☐ **[Yes]** (YES): Permanent torque control ☐ **[LI1]** (LI1) : : ☐ **[...]** (...): See the assignment conditions on page 118. If the assigned input or bit is at 1: Torque control If the assigned input or bit is at 0: Speed regulation		[No] (nO)
tr1 nO AI1 AI2 AI3 AI4 LCC Mdb CAn nEt APP PI PG	**[Torque ref. channel]** ☐ **[No]** (nO): Not assigned (zero torque reference). ☐ **[AI1]** (AI1): Analog input ☐ **[AI2]** (AI2): Analog input ☐ **[AI3]** (AI3): Analog input, if MT-VW3A3202 I/O card has been inserted ☐ **[AI4]** (AI4): Analog input, if MT-VW3A3202 I/O card has been inserted ☐ **[HMI]** (LCC): Graphic display terminal ☐ **[Modbus]** (Mdb): Integrated Modbus ☐ **[CANopen]** (CAn): Integrated CANopen ☐ **[Com. card]** (nEt): Communication card (if inserted) ☐ **[C.Insid. card]** (APP): Not applicable ☐ **[RP]** (PI): Frequency input, if MT-VW3A3202 I/O card has been inserted ☐ **[Encoder]** (PG): Encoder input, if encoder card has been inserted 100% of the reference corresponds to 300% of the rated torque.		[No] (nO)
tSd nO LI1 - - -	**[Torque ref. sign]** ☐ **[No]** (nO): Function inactive ☐ **[LI1]** (LI1) : : ☐ **[...]** (...): See the assignment conditions on page 118. If the assigned input or bit is at 0, the torque sign is the same as the reference. If the assigned input or bit is at 1, the torque sign is the opposite of the reference.		[No] (nO)
trt (‚)	**[Torque ratio]** Coefficient applied to [Torque reference] (tr1).	0 to 1000%	100%
trP (‚)	**[Torque ramp time]** Rise and fall time for a variation of 100% of the rated torque.	0 to 99.99 s	3 s
tSt SPd YES SPn	**[Torque control stop]** ☐ **[Speed]** (SPd): Speed regulation stop, in accordance with the type of stop configuration (see page 134) ☐ **[Freewheel]** (YES): Freewheel stop ☐ **[Spin]** (SPn): Zero torque stop, but maintaining the flux in the motor. This type of operation is only possible if [Motor control type] (Ctt) = [FVC] (FUC).		[Speed] (SPd)
SPt (‚)	**[Spin time]** The parameter can be accessed if [Torque control stop] (tSt) = [Spin] (SPn) Spin time following stop, in order to remain ready to restart quickly.	0 to 3600 s	1 s

(‚) Parameter that can be modified during operation or when stopped.

Buy: www.ValinOnline.com | Phone 844-385-3099 | Email: CustomerService@valin.com

Code	Name/Description	Adjustment range	Factory setting
	[TORQUE CONTROL] (continued)		
dbP	**[Positive deadband]** Positive deadband. Value added algebraically to the speed reference. Example for dbP = 10: • If reference = +50 Hz: + 50 + 10 = 60 • If reference = - 50 Hz: - 50 + 10 = - 40	0 to 2 x [Max frequency] (tFr)	10 Hz
dbn	**[Negative deadband]** Negative deadband. Value subtracted algebraically from the speed reference. Example for dbn = 10: • If reference = +50 Hz: + 50 - 10 = 40 • If reference = - 50 Hz: - 50 - 10 = - 60	0 to 2 x [Max frequency] (tFr)	10 Hz
rtO	**[Torque ctrl time out]** Time following automatic exit of torque control mode in the event of a fault or alarm.	0 to 999.9 s	60 s
tOb ALrM FLt	**[Torq. ctrl fault mgt]** Response of drive once time [Torque ctrl time out] (rtO) has elapsed. ☐ **[Alarm]** (ALrM) ☐ **[Fault]** (FLt) : Fault with freewheel stop.		[Alarm] (ALrM)

Parameter that can be modified during operation or when stopped.

Buy: www.ValinOnline.com | Phone 844-385-3099 | Email: CustomerService@valin.com

Torque limitation

There are two types of torque limitation:

- With a value that is fixed by a parameter
- With a value that is set by an analog input (AI, pulse or encoder)

If both types are enabled, the lowest value is taken into account. The two types of limitation can be configured or switched remotely using a logic input or via the communication bus.

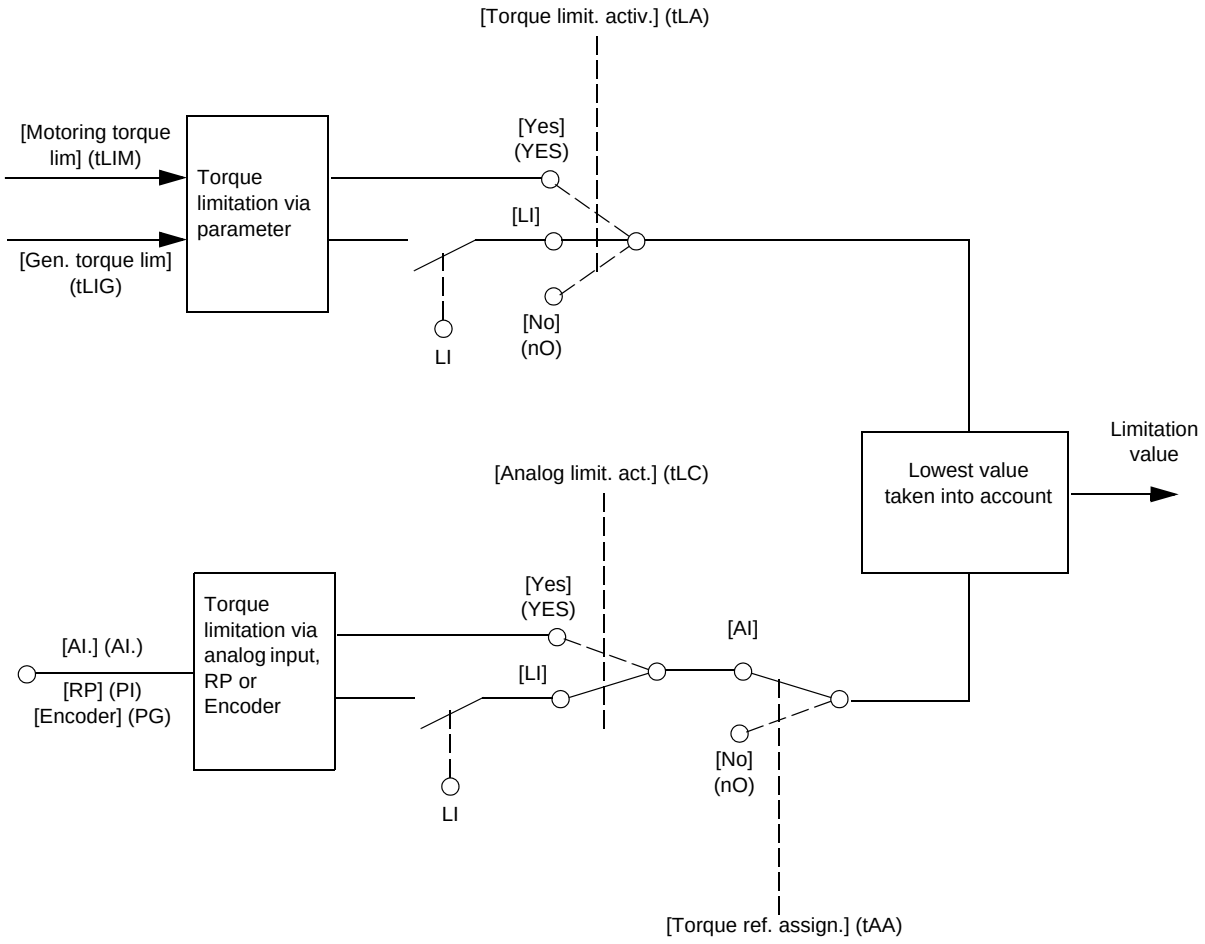

Buy: www.ValinOnline.com | Phone 844-385-3099 | Email: CustomerService@valin.com

Code	Name/Description	Adjustment range	Factory setting
tOL-	**[TORQUE LIMITATION]** This function cannot be accessed in V/F (V/hz) profile mode.		
tLA nO YES LI1 - - -	**[Torque limit. activ.]** ☐ **[No]** (nO): Function inactive ☐ **[Yes]** (YES): Function always active ☐ **[LI1]** (LI1) : : ☐ **[...]** (...): See the assignment conditions on page 118. If the assigned input or bit is at 0, the function is inactive. If the assigned input or bit is at 1, the function is active.		[No] (nO)
IntP 0.1 1	**[Torque increment]** The parameter cannot be accessed if [Torque limit. activ.] (tLA) = [No] (nO) Selection of units for the [Motoring torque lim] (tLIM) and [Gen. torque lim] (tLIG) parameters. ☐ **[0,1%]** (0.1) : unit 0.1%. ☐ **[1%]** (1): unit 1%.		[1 %] (1)
tLIM (↻)	**[Motoring torque lim]** (1) The parameter cannot be accessed if [Torque limit. activ.] (tLA) = [No] (nO) Torque limitation in motor mode, as a % or in 0.1% increments of the rated torque in accordance with the [Torque increment] (IntP) parameter.	0 to 300%	100%
tLIG (↻)	**[Gen. torque lim]** (1) The parameter cannot be accessed if [Torque limit. activ.] (tLA) = [No] (nO) Torque limitation in generator mode, as a % or in 0.1% increments of the rated torque in accordance with the [Torque increment] (IntP) parameter.	0 to 300%	100%
tAA nO AI1 - AI4 PI PG AIU1	**[Torque ref. assign.]** If the function is assigned, the limitation varies between 0% and 300% of the rated torque on the basis of the 0% to 100% signal applied to the assigned input. Examples: - 12 mA on a 4-20 mA input results in limitation to 150% of the rated torque. - 2.5 V on a 10 V input results in 75% of the rated torque. ☐ **[No]** (nO): Not assigned (function inactive) ☐ **[AI1]** (AI1) to **[AI4]** (AI4): Analog input, if MT-VW3A3202 I/O card has been inserted ☐ **[RP]** (PI): Frequency input, if MT-VW3A3202 I/O card has been inserted ☐ **[Encoder]** (PG): Encoder input, if encoder card has been inserted ☐ **[Network AI]** (AIU1): Virtual input via communication bus, to be configured via [AI net. channel] (AIC1) page 92. **⚠ WARNING** **UNINTENDED EQUIPMENT OPERATION** If the equipment switches to forced local mode (see page 234), the virtual input remains fixed at the last value transmitted. Do not use the virtual input and forced local mode in the same configuration. **Failure to follow these instructions can result in death or serious injury.**		[No] (nO)

(1) The parameter can also be accessed in the [1.3 SETTINGS] (SEt-)menu.

(↻) Parameter that can be modified during operation or when stopped.

Buy: www.ValinOnline.com | Phone 844-385-3099 | Email: CustomerService@valin.com

Code	Name/Description	Adjustment range	Factory setting
	[TORQUE LIMITATION] (continued)		
tLC	**[Analog limit. act.]** The parameter can be accessed if [Torque ref. assign.] (tAA) is not [No] (nO). ☐ **[Yes]** (YES): The limitation depends on the input assigned by [Torque ref. assign.] (tAA). ☐ **[LI1]** (LI1) : : ☐ **[...]** (...): See the assignment conditions on page 118. If the assigned input or bit is at 0: • The limitation is specified by the [Motoring torque lim] (tLIM) and [Gen. torque lim.] parameters (tLIG) if [Torque limit. activ.] (tLA) is not [No] (nO). • No limitation if [Torque limit. activ.] (tLA) = [No] (nO). If the assigned input or bit is at 1: • The limitation depends on the input assigned by [Torque ref. assign.] (tAA). **Note:** If [Torque limitation] (tLA) and [Torque ref. assign.] (tAA) are enabled at the same time, the lowest value will be taken into account.		[Yes] (YES)

Buy: www.ValinOnline.com | Phone 844-385-3099 | Email: CustomerService@valin.com

Code	Name/Description	Adjustment range	Factory setting
CL1-	**[2nd CURRENT LIMIT.]**		
LC2 nO LI1 - - -	**[Current limit 2]** ☐ **[No]** (nO): Function inactive. ☐ **[LI1]** (LI1) : : ☐ **[...]** (...): See the assignment conditions on page 118. If the assigned input or bit is at 0, the first current limitation is active. If the assigned input or bit is at 1, the second current limitation is active.		[No] (nO)
CL2	**[I Limit. 2 value]** (1) Second current limitation The parameter can be accessed if [Current limit 2] (LC2) is not [No] (nO). The adjustment range is limited to 1.36 In if [Switching freq.] (SFr) page 56 is less than 2 kHz. ☞ **Note:** If the setting is less than 0.25 In, the drive may lock in [Output Phase Loss] (OPF) fault mode if this has been enabled (see page 214). If it is less than the no-load motor current, the limitation no longer has any effect.	0 to 1.65 In (2)	1.5 In (2)
CL1	**[Current Limitation]** (1) First current limitation The adjustment range is limited to 1.36 In if [Switching freq.] (SFr) page 56 is less than 2 kHz. ☞ **Note:** If the setting is less than 0.25 In, the drive may lock in [Output Phase Loss] (OPF) fault mode if this has been enabled (see page 214). If it is less than the no-load motor current, the limitation no longer has any effect.	0 to 1.65 In (2)	1.5 In (2)

(1) The parameter can also be accessed in the [1.3 SETTINGS] (SEt-)menu.
(2) In corresponds to the rated drive current indicated in the Installation Manual and on the drive nameplate.

Parameter that can be modified during operation or when stopped.

Buy: www.ValinOnline.com | Phone 844-385-3099 | Email: CustomerService@valin.com

Line contactor command

The line contactor closes every time a run command (forward or reverse) is sent and opens after every stop as soon as the drive is at zero speed. For example, if the stop mode is stop on ramp, the contactor will open when the motor reaches zero speed.

Note: The drive control power supply must be provided via an external 24 V source.

Example circuit:

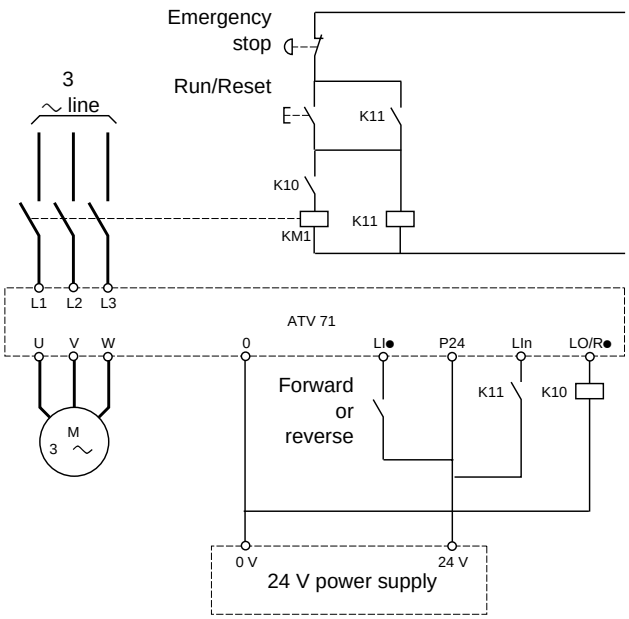

Note: The "Run/Reset" button must be pressed once the "Emergency stop" button has been released.

LI● = Run command [Forward] or [Reverse]
LO/R● [Line contactor ass.] (LLC)
LIn = [Drive lock] (LES)

CAUTION
This function can only be used for a small number of consecutive operations with a cycle time longer than 60 s (in order to avoid premature aging of the filter capacitor charging circuit). **Failure to follow this instruction can result in equipment damage.**

Buy: www.ValinOnline.com | Phone 844-385-3099 | Email: CustomerService@valin.com

Code	Name/Description	Adjustment range	Factory setting
LLC-	**[LINE CONTACTOR COMMAND]**		
LLC	**[Line contactor ass.]** Logic output or control relay nO **[No]** (nO): Function not assigned (in this case, none of the function parameters can be accessed). LO1 **[LO1]** (LO1) - LO4 to **[LO4]** (LO4): Logic output (if one or two I/O cards have been inserted, LO1 to LO2 or LO4 can be selected). r2 **[R2]** (r2) - r4 to **[R4]** (r4): Relay (selection of R2 extended to R3 or R4 if one or two I/O cards have been inserted). dO1 **[dO1]** (dO1): Analog output AO1 functioning as a logic output. Selection can be made if [AO1 assignment] (AO1) page 105 = [No] (nO).		[No] (nO)
LES	**[Drive lock]** nO **[No]** (nO): Function inactive. LI1 **[LI1]** (LI1) - - - : : **[...]** (...): See the assignment conditions on page 118. The drive locks when the assigned input or bit changes to 0.		[No] (nO)
LCt	**[Mains V. time out]** Monitoring time for closing of line contactor. If, once this time has elapsed, there is no voltage on the drive power circuit, the drive will lock with a "Line contactor" fault (LCF).	5 to 999 s	5 s

Buy: www.ValinOnline.com | Phone 844-385-3099 | Email: CustomerService@valin.com

Output contactor command

This allows the drive to control a contactor located between the drive and the motor. The request for the contactor to close is made when a run command is sent. The request for the contactor to open is made when there is no longer any current in the motor.

CAUTION
If a DC injection braking function has been configured it should not be left operating too long in stop mode, as the contactor only opens at the end of braking. **Failure to follow this instruction can result in equipment damage.**

Output contactor feedback

The corresponding logic input should be at 1 when there is no run command and at 0 during operation.
In the event of an inconsistency, the drive trips on an FCF2 fault if the output contactor fails to close (LIx at 1) and on an FCF1 fault if it fails to open (LIx at 0).
The parameter [Delay to motor run] (dbS) can be used to delay tripping in fault mode when a run command is sent and the [Delay to open cont.] (dAS) parameter delays the fault when a stop command is set.

Note:
Fault FCF2 (contactor failing to close) can be reset by the run command changing state from 1 to 0 (0 --> 1 --> 0 in 3-wire control).

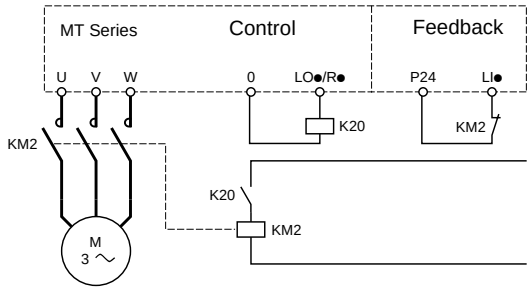

The [Out. contactor ass.] (OCC) and [Output contact. fdbk] (rCA) functions can be used individually or together.

Buy: www.ValinOnline.com | Phone 844-385-3099 | Email: CustomerService@valin.com

Code	Name/Description	Adjustment range	Factory setting
OCC-	**[OUTPUT CONTACTOR CMD]**		
OCC nO LO1 - LO4 r2 - r4 dO1	**[Out. contactor ass.]** Logic output or control relay ☐ **[No]** (nO): Function not assigned (in this case, none of the function parameters can be accessed). ☐ **[LO1]** (LO1) to **[LO4]** (LO4): Logic output (if one or two I/O cards have been inserted, LO1 to LO2 or LO4 can be selected). **[R2]** (r2) to **[R4]** (r4): Relay (selection of R2 extended to R3 or R4 if one or two I/O cards have been inserted). ☐ **[dO1]** (dO1): Analog output AO1 functioning as a logic output. Selection can be made if [AO1 assignment] (AO1) page 105 = [No] (nO).		[No] (nO)
rCA nO LI1 - - -	**[Output contact. fdbk]** ☐ **[No]** (nO): Function inactive ☐ **[LI1]** (LI1) : : ☐ **[...]** (...) : See the assignment conditions on page 118. The motor starts up when the assigned input or bit changes to 0.		[No] (nO)
dbS ( )	**[Delay to motor run]** Time delay for: • Motor control following the sending of a run command • Output contactor fault monitoring, if the feedback is assigned. If the contactor fails to close at the end of the set time, the drive will lock in FCF2 fault mode. This parameter can be accessed if [Output cont] (OCC) is assigned or if [Output contact. fdbk] (rCA) is assigned. The time delay must be greater than the closing time of the output contactor.	0.05 to 60 s	0.15
dAS ( )	**[Delay to open cont.]** Time delay for output contactor opening command following motor stop. This parameter can be accessed if [Output contact. fdbk] (rCA) is assigned. The time delay must be greater than the opening time of the output contactor. If it is set to 0, the fault will not be monitored. If the contactor fails to open at the end of the set time, the drive will lock in FCF1 fault mode.	0 to 5.00 s	0.10

( ) Parameter that can be modified during operation or when stopped.

Buy: www.ValinOnline.com | Phone 844-385-3099 | Email: CustomerService@valin.com

Positioning by sensors or limit switches

This function is used for managing positioning using position sensors or limit switches linked to logic inputs or using control word bits:

- Slowing down
- Stopping

The action logic for the inputs and bits can be configured on a rising edge (change from 0 to 1) or a falling edge (change from 1 to 0). The example below has been configured on a rising edge:

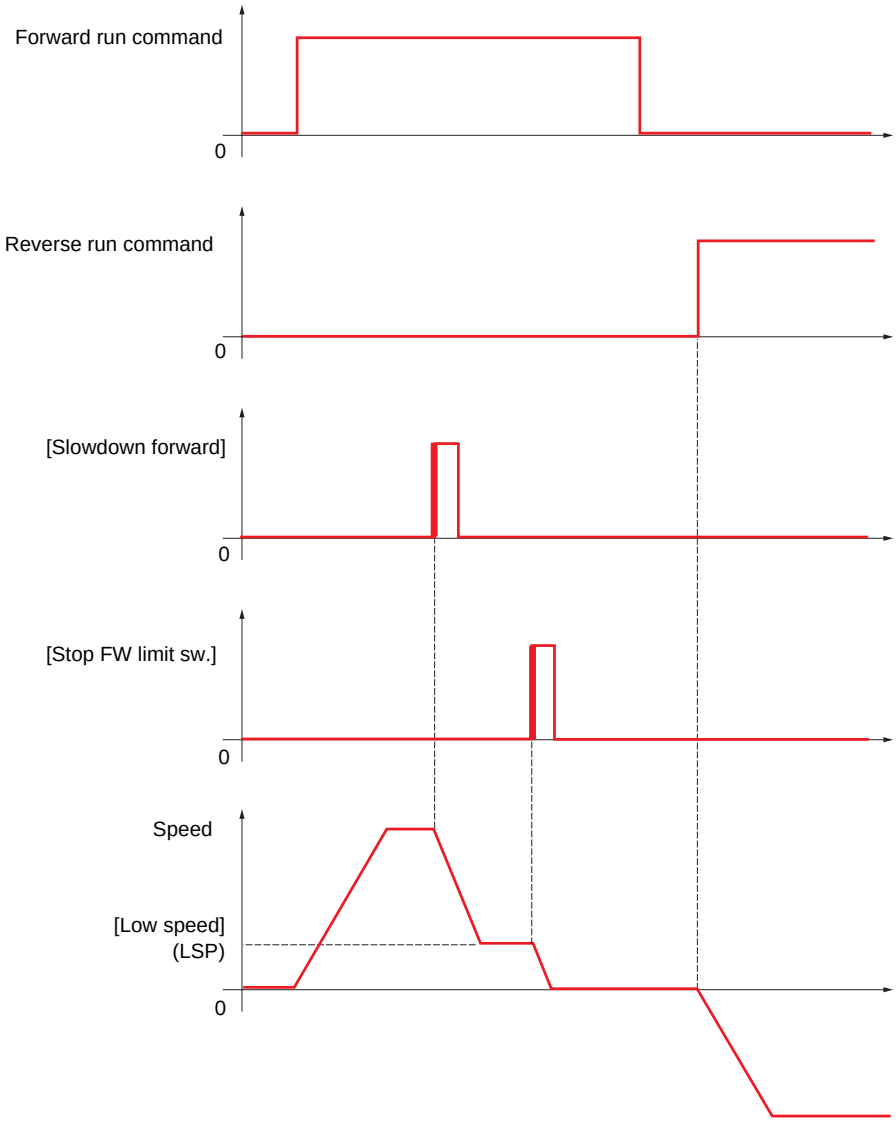

The slowdown mode and stop mode can be configured.
The operation is identical for both directions of operation. Slowdown and stopping operate according to the same logic, described below.

Example: Forward slowdown, on rising edge

- Forward slowdown takes place on a rising edge (change from 0 to 1) of the input or bit assigned to forward slowdown if this rising edge occurs in forward operation. The slowdown command is then memorized, even in the event of a power outage. Operation in the opposite direction is authorized at high speed. The slowdown command is deleted on a falling edge (change from 1 to 0) of the input or bit assigned to forward slowdown if this falling edge occurs in reverse operation.
- A bit or a logic input can be assigned to disable this function.
- Although forward slowdown is disabled while the disable input or bit is at 1, sensor changes continue to be monitored and saved.

Buy: www.ValinOnline.com | Phone 844-385-3099 | Email: CustomerService@valin.com

Example: Positioning on a limit switch, on rising edge

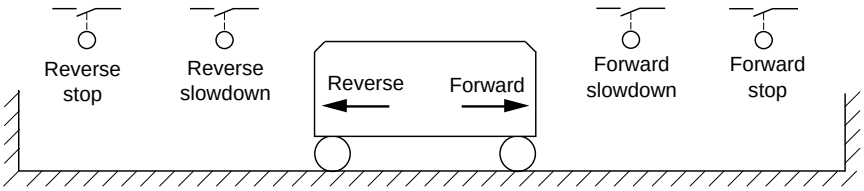

Operation with short cams:

In this instance, when operating for the first time or after restoring the factory settings, the drive must initially be started outside the slowdown and stop zones in order to initialize the function.

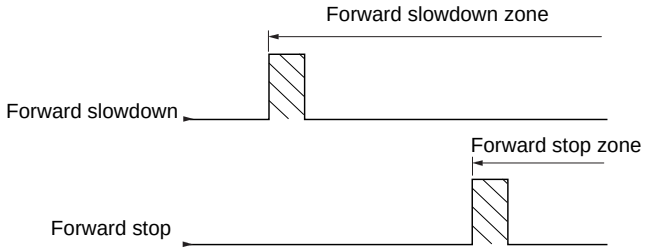

Operation with long cams:

In this instance, there is no restriction, which means that the function is initialized across the whole trajectory.

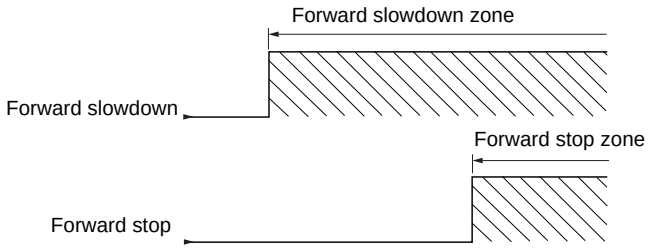

Buy: www.ValinOnline.com | Phone 844-385-3099 | Email: CustomerService@valin.com

Stop at distance calculated after deceleration limit switch

This function can be used to control the stopping of the moving part automatically once a preset distance has been traveled after the slowdown limit switch.

On the basis of the rated linear speed and the speed estimated by the drive when the slowdown limit switch is tripped, the drive will induce the stop at the configured distance.
This function is useful in applications where one manual-reset overtravel limit switch is common to both directions. It will then only respond to ensure safety if the distance is exceeded. The stop limit switch retains priority in respect of the function.

The [Deceleration type] (dSF) parameter can be configured to obtain either of the functions described below:

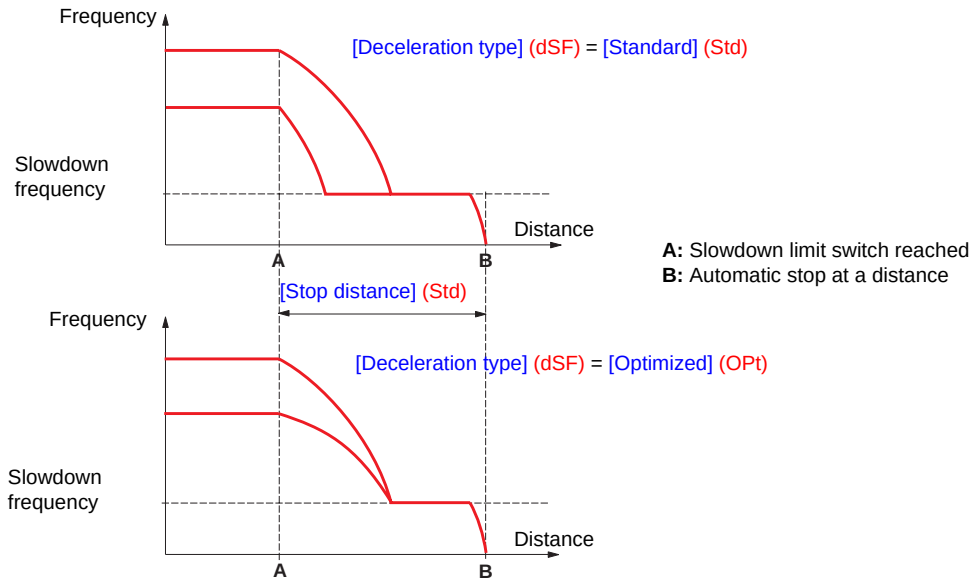

Note :
- If the deceleration ramp is modified while stopping at a distance is in progress, this distance will not be observed.
- If the direction is modified while stopping at a distance is in progress, this distance will not be observed.

.

⚠ DANGER

UNINTENDED EQUIPMENT OPERATION
- Check that the parameters configured are consistent (in particular, you should check that the required distance is possible).
- This function does not replace the stop limit switch, which remains necessary for safety reasons.

Failure to follow these instructions will result in death or serious injury.

Buy: www.ValinOnline.com | Phone 844-385-3099 | Email: CustomerService@valin.com

Code	Name/Description	Adjustment range	Factory setting
LPO-	**[POSITIONING BY SENSORS]** **Note:** This function cannot be used with certain other functions. Follow the instructions on page 124.		
SAF	**[Stop FW limit sw.]** nO **[No]** (nO): Not assigned LI1 **[LI1]** (LI1) to **[LI6]** (LI6) - **[LI7]** (LI7) to **[LI10]** (LI10): If MT-VW3A3201 logic I/O card has been inserted - **[LI11]** (LI11) to **[LI14]** (LI14): If MT-VW3A3202 extended I/O card has been inserted C101 **[C101]** (C101) to **[C115]** (C115): With integrated Modbus in [I/O profile] (IO) - **[C201]** (C201) to **[C215]** (C215): With integrated CANopen in [I/O profile] (IO) - **[C301]** (C301) to **[C315]** (C315): With a communication card in [I/O profile] (IO) - **[C401]** (C401) to **[C415]** (C415): Not applicable Cd00 **[CD00]** (Cd00) to **[CD13]** (Cd13): In [I/O profile] (IO) can be switched with possible logic inputs - **[CD14]** (Cd14) to **[CD15]** (Cd15): In [I/O profile] (IO) can be switched without logic inputs	[No] (nO)	
SAr	**[Stop RV limit sw.]** Same assignments possible as for [Stop FW limit sw.] (SAF) above.	[No] (nO)	
SAL	**[Stop limit config.]** The parameter can be accessed if at least one limit switch or one stop sensor has been assigned. It defines the positive or negative logic of the bits or inputs assigned to the stop. LO **[Active low]** (LO): Stop controlled on a falling edge (change from 1 to 0) of the assigned bits or inputs. HIG **[Active high]** (HIG): Stop controlled on a rising edge (change from 0 to 1) of the assigned bits or inputs.	[Active high] (HIG)	
dAF	**[Slowdown forward]** Same assignments possible as for [Stop FW limit sw.] (SAF) above.	[No] (nO)	
dAr	**[Slowdown reverse]** Same assignments possible as for [Stop FW limit sw.] (SAF) above.	[No] (nO)	
dAL	**[Slowdown limit cfg.]** The parameter can be accessed if at least one limit switch or one slowdown sensor has been assigned. It defines the positive or negative logic of the bits or inputs assigned to the slowdown. LO **[Active low]** (LO): Slowdown controlled on a falling edge (change from 1 to 0) of the assigned bits or inputs. HIG **[Active high]** (HIG): Slowdown controlled on a rising edge (change from 0 to 1) of the assigned bits or inputs.	[Active high] (HIG)	

Buy: www.ValinOnline.com | Phone 844-385-3099 | Email: CustomerService@valin.com

Code	Name/Description	Adjustment range	Factory setting
	[POSITIONING BY SENSORS] (continued)		
CLS	**[Disable limit sw.]** The parameter can be accessed if at least one limit switch or one sensor has been assigned. nO ☐ **[No]** (nO): Not assigned LI1 ☐ **[LI1]** (LI1) - : - : - ☐ **[...]** (...): See the assignment conditions on page 118. The action of the limit switches is disabled when the assigned bit or input is at 1. If, at this time, the drive is stopped or being slowed down by limit switches, it will restart up to its speed reference.		[No] (nO)
PAS	**[Stop type]** The parameter can be accessed if at least one limit switch or one sensor has been assigned. rMP ☐ **[Ramp stop]** (rMP): On ramp FSt ☐ **[Fast stop]** (FSt): Fast stop (ramp time reduced by [Ramp divider] (dCF), see page 134) YES ☐ **[Freewheel]** (YES): Freewheel stop		[Ramp stop] (rMP)
dSF	**[Deceleration type]** The parameter can be accessed if at least one limit switch or one sensor has been assigned. Std ☐ **[Standard]** (Std): Uses the [Deceleration] (dEC) or [Deceleration 2] (dE2) ramp (depending on which has been enabled). OPt ☐ **[Optimized]** (OPt): The ramp time is calculated on the basis of the actual speed when the slowdown contact switches, in order to limit the operating time at low speed (optimization of the cycle time: the slowdown time is constant regardless of the initial speed).		[Standard] (Std)
Std	**[Stop distance]** The parameter can be accessed if at least one limit switch or one sensor has been assigned. Activation and adjustment of the "Stop at distance calculated after the slowdown limit switch" function. nO ☐ **[No]** (nO): Function inactive (the next two parameters will, therefore, be inaccessible). - ☐ **0.01 yd to 10.94 yd**: Stop distance range in yards.		[No] (nO)
nLS	**[Rated linear speed]** The parameter can be accessed if at least one limit switch or one sensor has been assigned. Rated linear speed in meters/second.	0.20 to 5.00 m/s	1.00 m/s
SFd	**[Stop corrector]** The parameter can be accessed if at least one limit switch or one sensor has been assigned. Scaling factor applied to the stop distance to compensate, for example, a non-linear ramp.	50 to 200%	100%

Buy: www.ValinOnline.com | Phone 844-385-3099 | Email: CustomerService@valin.com

Parameter set switching [PARAM. SET SWITCHING]

A set of 1 to 15 parameters from the [1.3 SETTINGS] (SEt-) menu on page 49 can be selected and 2 or 3 different values assigned. These 2 or 3 sets of values can then be switched using 1 or 2 logic inputs or control word bits. This switching can be performed during operation (motor running).
It can also be controlled on the basis of one or two frequency thresholds, whereby each threshold acts as a logic input (0 = threshold not reached, 1 = threshold reached).

	Values 1	Values 2	Values 3
Parameter 1 Parameter 2 Parameter 3 Parameter 4 Parameter 5 Parameter 6 Parameter 7 Parameter 8 Parameter 9 Parameter 10 Parameter 11 Parameter 12 Parameter 13 Parameter 14 Parameter 15	Parameter 1 Parameter 2 Parameter 3 Parameter 4 Parameter 5 Parameter 6 Parameter 7 Parameter 8 Parameter 9 Parameter 10 Parameter 11 Parameter 12 Parameter 13 Parameter 14 Parameter 15	Parameter 1 Parameter 2 Parameter 3 Parameter 4 Parameter 5 Parameter 6 Parameter 7 Parameter 8 Parameter 9 Parameter 10 Parameter 11 Parameter 12 Parameter 13 Parameter 14 Parameter 15	Parameter 1 Parameter 2 Parameter 3 Parameter 4 Parameter 5 Parameter 6 Parameter 7 Parameter 8 Parameter 9 Parameter 10 Parameter 11 Parameter 12 Parameter 13 Parameter 14 Parameter 15
Input LI or bit or frequency threshold 2 values	0	1	0 or 1
Input LI or bit or frequency threshold 3 values	0	0	1

☞ **Note:** Do not modify the parameters in the [1.3 SETTINGS] (SEt-) menu, because any modifications made in this menu ([1.3 SETTINGS] (SEt-)) will be lost on the next power-up. The parameters can be adjusted during operation in the [PARAM. SET SWITCHING] (MLP-) menu, on the active configuration.

Note: Parameter set switching cannot be configured from the integrated display keypad.
Parameters can only be adjusted on the integrated display keypad if the function has been configured previously via the graphic display keypad, by PowerSuite or via the bus or communication network. If the function has not been configured, the **MLP-** menu and the **PS1-**, **PS2-**, **PS3-** submenus will not appear.

Buy: www.ValinOnline.com | Phone 844-385-3099 | Email: CustomerService@valin.com

Code	Name/Description	Adjustment range	Factory setting
nLP-	**[PARAM. SET SWITCHING]**		
CHA1 nO FtA F2A LI1 - - -	**[2 parameter sets]** ☐ **[No]** (nO): Function inactive. ☐ **[Freq. Th.att.]** (FtA): Switching via [Freq. threshold] (Ftd) page 62. ☐ **[Freq. Th. 2 attain.]** (F2A): Switching via [Freq. threshold 2] (Ftd) page 62. ☐ **[LI1]** (LI1) : : ☐ **[...]** (...): See the assignment conditions on page 118. Switching 2 parameter sets		[No] (nO)
CHA2 nO FtA F2A LI1 - - -	**[3 parameter sets]** ☐ **[No]** (nO): Function inactive. ☐ **[Freq. Th.att.]** (FtA): Switching via [Freq. threshold] (Ftd) page 62. ☐ **[Freq. Th. 2 attain.]** (F2A): Switching via [Freq. threshold 2] (Ftd) page 62. ☐ **[LI1]** (LI1) : : ☐ **[...]** (...): See the assignment conditions on page 118. Switching 3 parameter sets **Note:** In order to obtain 3 parameter sets, [2 parameter sets] must also be configured.		[No] (nO)
	[PARAMETER SELECTION] The parameter can only be accessed on the graphic display keypad if [2 parameter sets] is not [No]. Making an entry in this parameter opens a window containing all the adjustment parameters that can be accessed. Select 1 to 15 parameters using ENT (a tick then appears next to the parameter). Parameter(s) can also be deselected using ENT. Example: PARAMETER SELECTION 1.3 SETTINGS Ramp increment ☑ - - - - - - - - - ☐ - - - - - - - - - ☐ - - - - - - - - - ☑		
PS1-	**[SET 1]** The parameter can be accessed if at least 1 parameter has been selected in [PARAMETER SELECTION]. Making an entry in this parameter opens a settings window containing the selected parameters **in the order in which they were selected**. With the graphic display keypad : RDY Term +0.00Hz 0A SET1 Acceleration : 9.51 s Deceleration : 9.67 s Acceleration 2 : 12.58 s Deceleration 2 : 13.45 s Begin Acc round: 2.3 s Code Quick ENT → RDY Term +0.00Hz 0A Acceleration 9.51 s Min = 0.1 Max = 999.9 << >> Quick With the integrated display terminal: Proceed as in the Settings menu using the parameters that appear.		

Buy: www.ValinOnline.com | Phone 844-385-3099 | Email: CustomerService@valin.com

Code	Name/Description	Adjustment range	Factory setting
	[PARAM. SET SWITCHING] (continued)		
PS2-	**[SET 2]** The parameter can be accessed if at least 1 parameter has been selected in [PARAMETER SELECTION]. Procedure identical to [SET 1] (PS1-).		
PS3-	**[SET 3]** The parameter can be accessed if [3 parameter sets] is not [No] and if at least 1 parameter has been selected in [PARAMETER SELECTION]. Procedure identical to [SET 1] (PS1-).		

Note: We recommend that a parameter set switching test is carried out while stopped and a check is made to ensure that it has been performed correctly.
Some parameters are interdependent and in this case may be restricted at the time of switching.

Interdependencies between parameters must be respected, <u>even between different sets</u>.

Example: The highest [Low speed] (LSP) must be below the lowest [High speed] (HSP).

Buy: www.ValinOnline.com | Phone 844-385-3099 | Email: CustomerService@valin.com

Motor or configuration switching [MULTIMOTORS/CONFIG.]

The drive may contain up to 3 configurations, which can be saved using the [1.12 FACTORY SETTINGS] (FCS-) menu, page 238.
Each of these configurations can be activated remotely, enabling adaptation to:

- 2 or 3 different motors or mechanisms (multimotor mode)
- 2 or 3 different configurations for a single motor (multiconfiguration mode)

The two switching modes cannot be combined.

Note: The following conditions MUST be observed:

- Switching may only take place when stopped (drive locked). If a switching request is sent during operation, it will not be executed until the next stop.
- In the event of motor switching, the following additional conditions apply:
  - When the motors are switched, the power and control terminals concerned must also be switched as appropriate.
  - The maximum power of the drive must not be exceeded by any of the motors.
- All the configurations to be switched must be set and saved in advance in the same hardware configuration, this being the definitive configuration (option and communication cards). Failure to follow this instruction can cause the drive to lock on an [Incorrect config.] (CFF) fault.

Menu and parameters switched in multimotor mode

- [1.3 SETTINGS] (SEt-)
- [1.4 MOTOR CONTROL] (drC-)
- [1.5 INPUTS / OUTPUTS CFG] (I-O-)
- [1.6 COMMAND] (CtL-)
- [1.7 APPLICATION FUNCT.] (FUn-) with the exception of the [MULTIMOTORS/CONFIG.] function (to be configured once only)
- [1.8 FAULT MANAGEMENT] (FLt)
- [1.13 USER MENU]
- [USER CONFIG.]: The name of the configuration specified by the user in the [1.12 FACTORY SETTINGS] (FCS-) menu

Menu and parameters switched in multiconfiguration mode

As in multimotor mode, except for the motor parameters that are common to the three configurations:

- Rated current
- Thermal current
- Rated voltage
- Rated frequency
- Rated speed
- Rated power
- IR compensation
- Slip compensation
- Synchronous motor parameters
- Type of thermal protection
- Thermal state
- The auto-tuning parameters and motor parameters that can be accessed in expert mode
- Type of motor control

Note: No other menus or parameters can be switched.

Buy: www.ValinOnline.com | Phone 844-385-3099 | Email: CustomerService@valin.com

Switching command

Depending on the number of motors or selected configuration (2 or 3), the switching command is sent using one or two logic inputs. The table below lists the possible combinations.

LI 2 motors or configurations	LI 3 motors or configurations	Number of configuration or active motor
0	0	0
1	0	1
0	1	2
1	1	2

Schematic diagram for multimotor mode

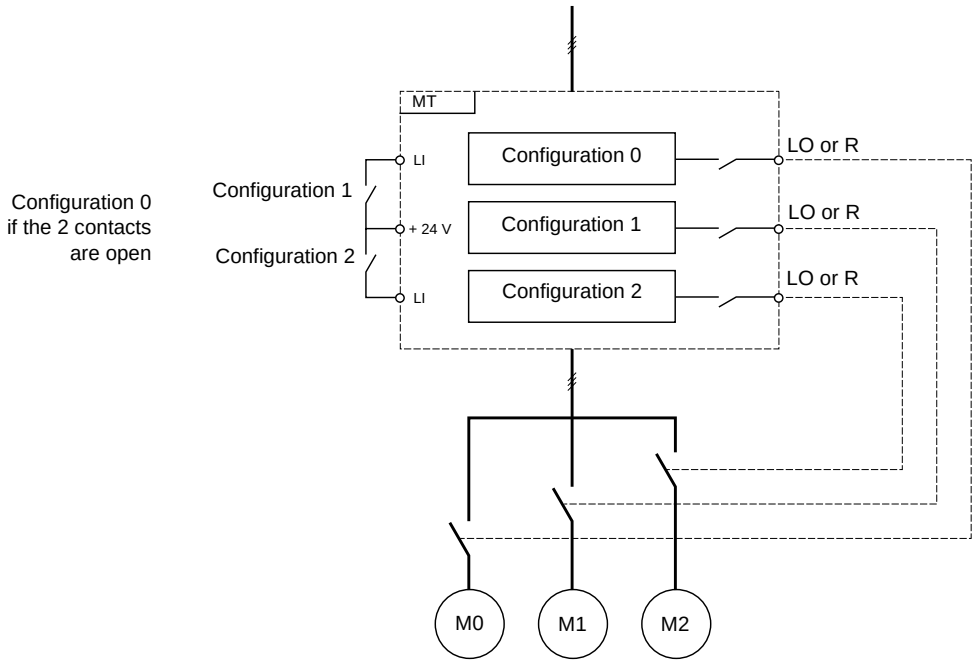

Auto-tuning in multimotor mode

This auto-tuning can be performed:

- Manually using a logic input when the motor changes
- Automatically each time the motor is activated for the 1st time after switching on the drive, if the [Automatic autotune] (AUt) parameter on page 65 = [Yes] (YES).

Motor thermal states in multimotor mode:

The drive protects the three motors individually. Each thermal state takes into account all stop times, including drive shutdowns.
It is, therefore, not necessary to perform auto-tuning every time the power is switched on. It is sufficient to auto-tune each motor at least once.

Configuration information output

In the [1.5 INPUTS / OUTPUTS CFG] (I-O-) menu, a logic output can be assigned to each configuration or motor (2 or 3) for remote information transmission.

☞ **Note:** As the [1.5 INPUTS / OUTPUTS CFG] (I-O-) menu is switched, these outputs must be assigned in all configurations in which information is required.

Buy: www.ValinOnline.com | Phone 844-385-3099 | Email: CustomerService@valin.com

Code	Name/Description	Adjustment range	Factory setting
MMC-	**[MULTIMOTORS/CONFIG.]**		
CHM nO YES	**[Multimotors]** ☐ **[No]** (nO): Multiconfiguration possible ☐ **[Yes]** (YES): Multimotor possible		[No] (nO)
CnF1 nO LI1 - - C111 - - -	**[2 Configurations]** ☐ **[No]** (nO): No switching ☐ **[LI1]** (LI1) to **[LI6]** (LI6) ☐ **[LI7]** (LI7) to **[LI10]** (LI10): If MT-VW3A3201 logic I/O card has been inserted ☐ **[LI11]** (LI11) to **[LI14]** (LI14): If MT-VW3A3202 extended I/O card has been inserted ☐ **[C111]** (C111) to **[C115]** (C115): With integrated Modbus ☐ **[C211]** (C211) to **[C215]** (C215): With integrated CANopen ☐ **[C311]** (C311) to **[C315]** (C315): With a communication card ☐ **[C411]** (C411) to **[C415]** (C415): Not applicable Switching of 2 motors or 2 configurations		[No] (nO)
CnF2 nO LI1 - - C111 - - -	**[3 Configurations]** ☐ **[No]** (nO): No switching ☐ **[LI1]** (LI1) to **[LI6]** (LI6) ☐ **[LI7]** (LI7) to **[LI10]** (LI10): If MT-VW3A3201 logic I/O card has been inserted ☐ **[LI11]** (LI11) to **[LI14]** (LI14): If MT-VW3A3202 extended I/O card has been inserted ☐ **[C111]** (C111) to **[C115]** (C115): With integrated Modbus ☐ **[C211]** (C211) to **[C215]** (C215): With integrated CANopen ☐ **[C311]** (C311) to **[C315]** (C315): With a communication card ☐ **[C411]** (C411) to **[C415]** (C415): Not applicable Switching of 3 motors or 3 configurations **Note:** In order to obtain 3 motors or 3 configurations, [2 Configurations] (CnF1) must also be configured.		[No] (nO)
tnL-	**[AUTO TUNING BY LI]**		
tUL nO LI1 - - -	**[Auto-tune assign.]** ☐ **[No]** (nO): Not assigned ☐ **[LI1]** (LI1) : : ☐ **[...]** (...): See the assignment conditions on page 118. Auto-tuning is performed when the assigned input or bit changes to 1. ☞ **Note:** Auto-tuning causes the motor to start up.		[No] (nO)

Buy: www.ValinOnline.com | Phone 844-385-3099 | Email: CustomerService@valin.com

Traverse control

Function for winding reels of yarn (in textile applications)

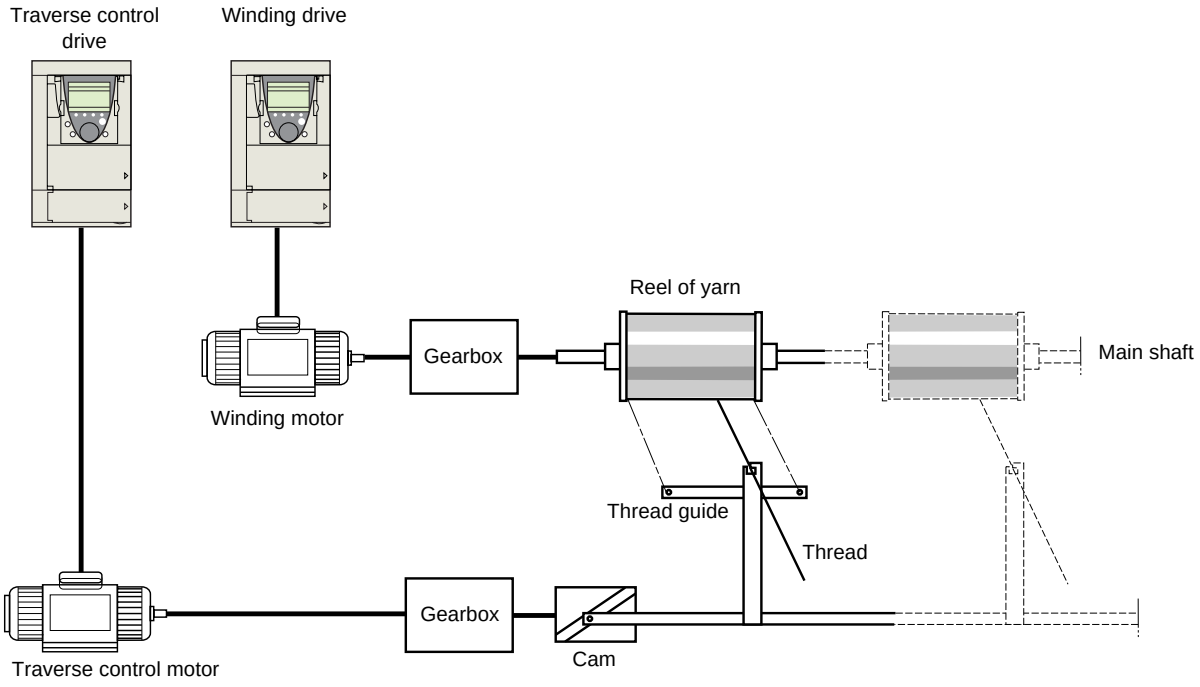

The speed of rotation of the cam must follow a precise profile to ensure that the reel is steady, compact and linear:

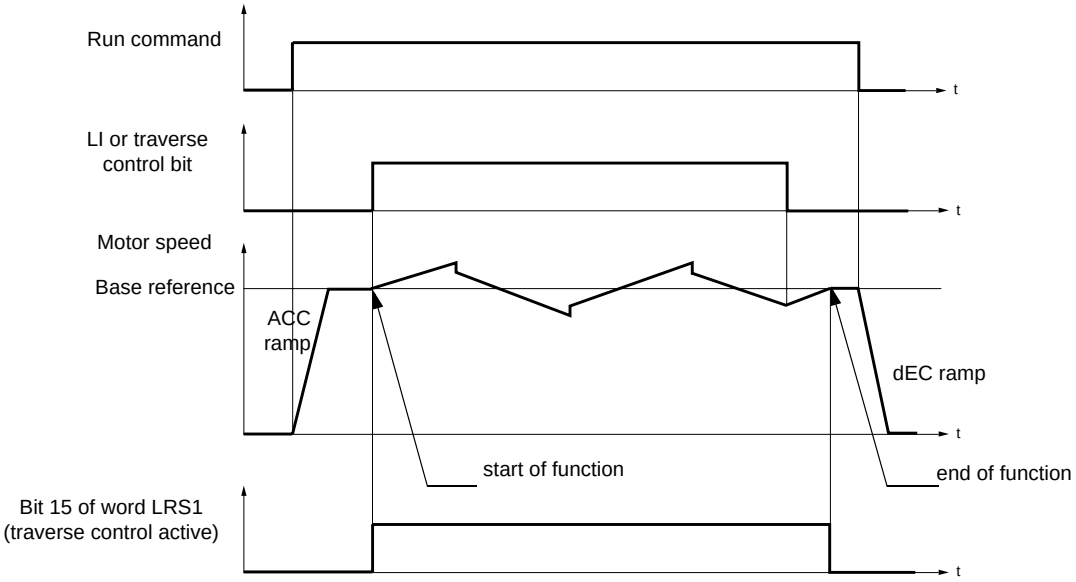

The function starts when the drive has reached its base reference and the traverse control command has been enabled.
When the traverse control command is disabled, the drive returns to its base reference, following the ramp determined by the traverse control function. The function then stops, as soon as it has returned to this reference.
Bit 15 of word LRS1 is at 1 while the function is active.

Buy: www.ValinOnline.com | Phone 844-385-3099 | Email: CustomerService@valin.com

Function parameters:

These define the cycle of frequency variations around the base reference, as shown in the diagram below:

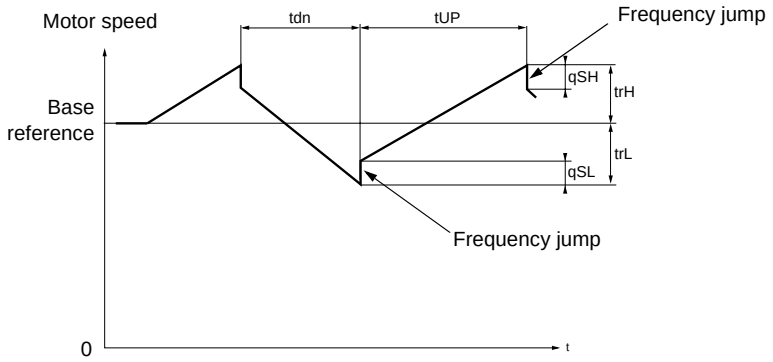

- trC: [Yarn control]: Assignment of the traverse control command to a logic input or to a communication bus control word bit
- tdn: [Traverse ctrl. decel] time, in seconds
- tUP: [Traverse ctrl. accel.] time, in seconds
- trH: [Traverse freq. high], in Hertz
- trL: [Traverse Freq. Low], in Hertz
- qSH: [Quick step High], in Hertz
- qSL: [Quick step Low], in Hertz

Reel parameters:

- tbO: [Reel time]: Time taken to make a reel, in minutes.
  This parameter is intended to signal the end of winding. When the traverse control operating time since command trC reaches the value of tbO, the logic output or one of the relays changes to state 1, if the corresponding function EbO has been assigned.
  The traverse control operating time EbOt can be monitored online by a communication bus and in the Monitoring menu.
- dtF: [Decrease ref. speed]: Decrease in the base reference.
  In certain cases, the base reference has to be reduced as the reel increases in size. The dtF value corresponds to time tbO. Once this time has elapsed, the reference continues to fall, following the same ramp. If low speed LSP is at 0, the speed reaches 0 Hz, the drive stops and must be reset by a new run command.
  If low speed LSP is not 0, the traverse control function continues to operate above LSP.

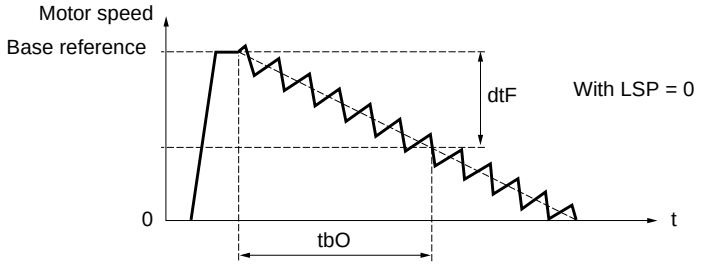

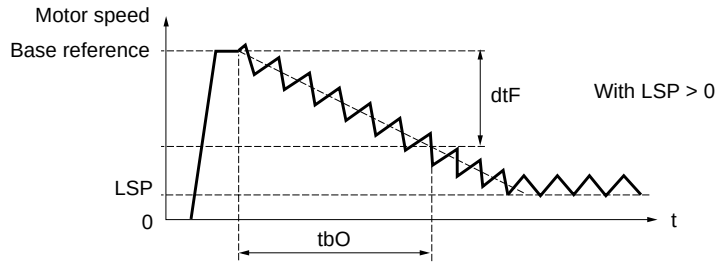

Buy: www.ValinOnline.com | Phone 844-385-3099 | Email: CustomerService@valin.com

- rtr: [Init. traverse ctrl] Reinitialize traverse control.
  This command can be assigned to a logic input or to a communication bus control word bit. It resets the EbO alarm and the EbOt operating time to zero and reinitializes the reference to the base reference. As long as rtr remains at 1, the traverse control function is disabled and the speed remains the same as the base reference.
  This command is used primarily when changing reels.

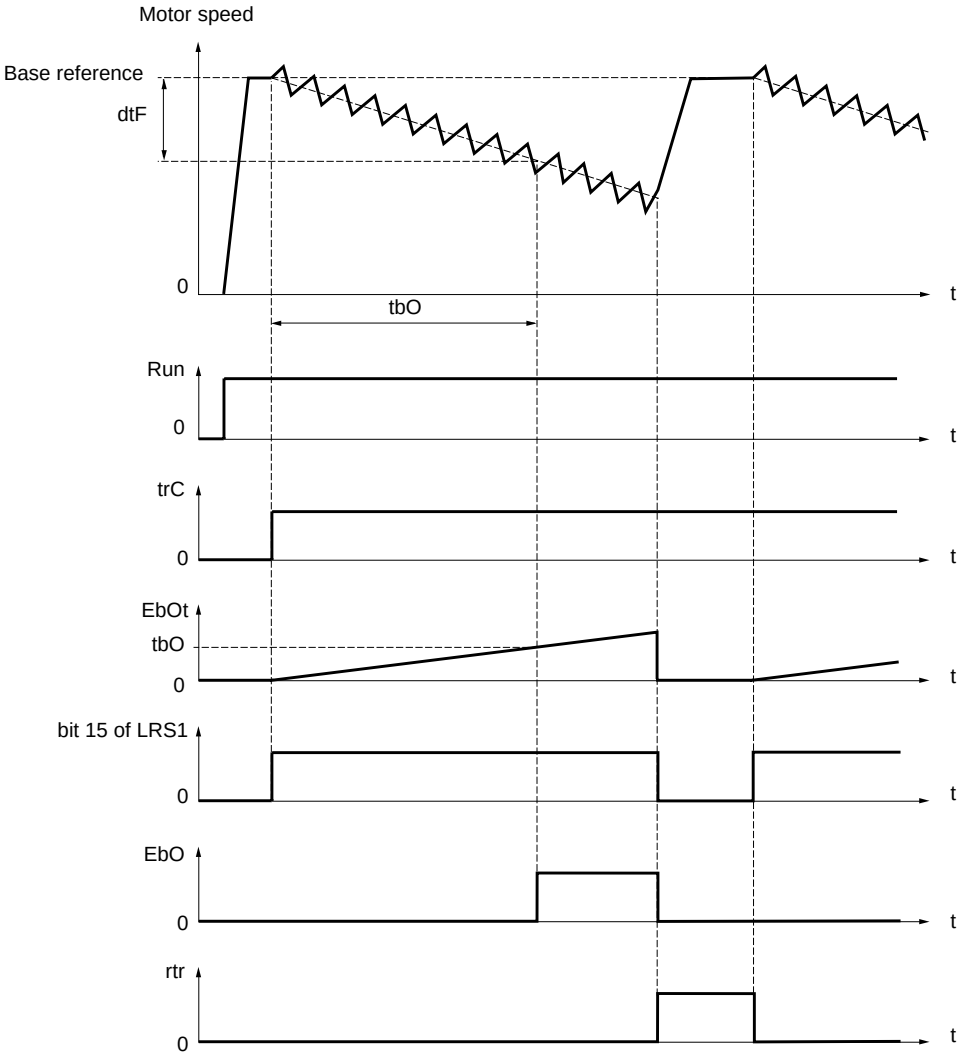

Buy: www.ValinOnline.com | Phone 844-385-3099 | Email: CustomerService@valin.com

Anti - Oscillation

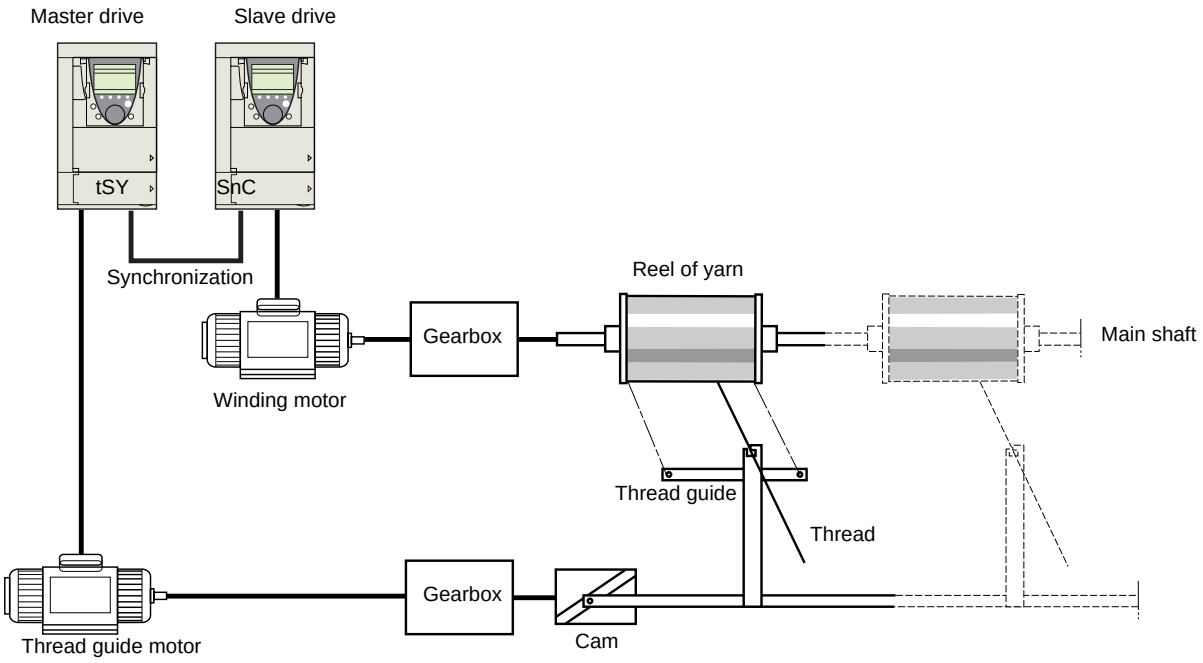

The "Anti-oscillation" function is used in certain applications to obtain a constant yarn tension when the "Traverse control" function is producing considerable variations in speed on the yarn guide motor (trH and trL, see page 202).

Two motors must be used (one master and one slave).

The master controls the speed of the yarn guide, the slave controls the winding speed. The function assigns the slave a speed profile, which is in out of phase with that of the master. This means that synchronization is required, using one of the master's logic outputs and one of the slave's logic inputs.

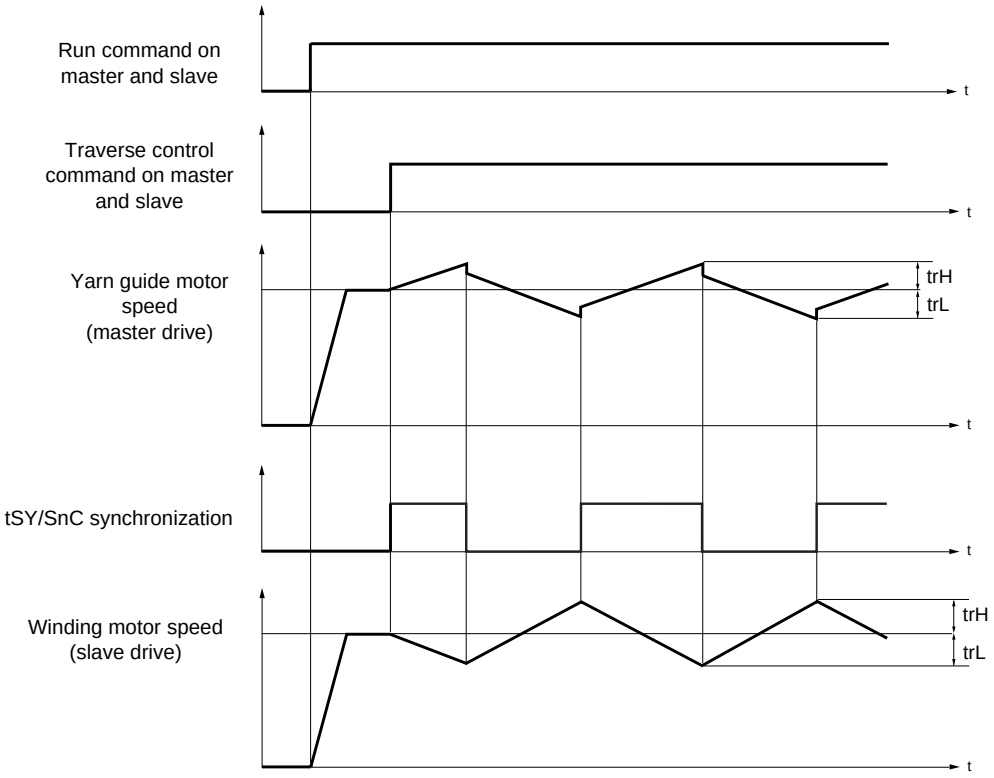

Buy: www.ValinOnline.com | Phone 844-385-3099 | Email: CustomerService@valin.com

Connection of synchronization I/O

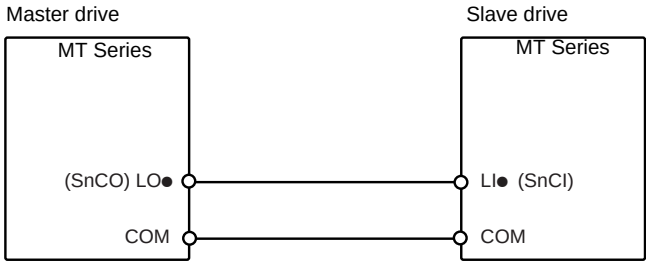

The starting conditions for the function are:

- Base speeds reached on both drives
- [Yarn control] (trC) input activated
- Synchronization signal present

Note: On the slave drive, the [Quick step High] (qSH) and [Quick step Low] (qSL) parameters should generally be left at zero.

Buy: www.ValinOnline.com | Phone 844-385-3099 | Email: CustomerService@valin.com

Textiles

Code	Name/Description	Adjustment range	Factory setting
trO-	**[TRAVERSE CONTROL]** **Note:** This function cannot be used with certain other functions. Follow the instructions on page 124.		
trC nO LI1 - - -	**[Yarn control]** ☐ **[No]** (nO): Function inactive, thereby preventing access to other parameters. ☐ **[LI1]** (LI1) : : ☐ **[...]** (...): See the assignment conditions on page 118. The "traverse control" cycle starts when the assigned input or bit changes to 1 and stops when it changes to 0.		[No] (nO)
trH	**[Traverse freq. high]** (1)	0 to 10 Hz	4 Hz
trL	**[Traverse Freq. Low]** (1)	0 to 10 Hz	4 Hz
qSH	**[Quick step High]** (1)	0 to [Traverse freq. high] (trH)	0 Hz
qSL	**[Quick step Low]** (1)	0 to [Traverse Freq. Low] (trL)	0 Hz
tUP	**[Traverse ctrl. accel.]**	0.1 to 999.9 s	4 s
tdn	**[Traverse ctrl. decel]**	0.1 to 999.9 s	4 s
tbO	**[Reel time]** Reel execution time	0 to 9999 minutes	0 minute
EbO nO LO1 - LO4 r2 - r4 dO1	**[End reel]** ☐ **[No]** (nO): Function not assigned. ☐ **[LO1]** (LO1) to **[LO4]** (LO4): Logic output (if one or two I/O cards have been inserted, LO1 to LO2 or LO4 can be selected). ☐ **[R2]** (r2) to **[R4]** (r4): Relay (selection of R2 extended to R3 or R4 if one or two I/O cards have been inserted). ☐ **[dO1]** (dO1): Analog output AO1 functioning as a logic output. Selection can be made if [AO1 assignment] (AO1) page 105 = [No] (nO). The assigned output or relay changes to state 1 when the traverse control operating time reaches the [Reel time] (tbO).		[No] (nO)

(1) The parameter can also be accessed in the [1.3 SETTINGS] (SEt-)menu.

Parameter that can be modified during operation or when stopped.

Buy: www.ValinOnline.com | Phone 844-385-3099 | Email: CustomerService@valin.com

Code	Name/Description	Adjustment range	Factory setting
	[TRAVERSE CONTROL] (continued)		
SnC nO LI1 - - -	**[Counter wobble]** ☐ **[No]** (nO): Function not assigned. ☐ **[LI1]** (LI1) : : ☐ **[...]** (...): See the assignment conditions on page 118. Synchronization input. To be configured on the winding drive (slave) only.		[No] (nO)
tSY nO LO1 - LO4 r2 - r4 dO1	**[Sync. wobble]** ☐ **[No]** (nO): Function not assigned. ☐ **[LO1]** (LO1) to **[LO4]** (LO4): Logic output (if one or two I/O cards have been inserted, LO1 to LO2 or LO4 can be selected). ☐ **[R2]** (r2) to **[R4]** (r4): Relay (selection of R2 extended to R3 or R4 if one or two I/O cards have been inserted). ☐ **[dO1]** (dO1): Analog output AO1 functioning as a logic output. Selection can be made if [AO1 assignment] (AO1) page 105 = [No] (nO). Synchronization output. To be configured on the yarn guide drive (master) only.		[No] (nO)
dtF ()	**[Decrease ref. speed]** Decrease in the base reference during the traverse control cycle.	0 to 1600 Hz	0 Hz
rtr nO LI1 - - -	**[Init. traverse ctrl]** ☐ **[No]** (nO): Function not assigned. ☐ **[LI1]** (LI1) : : ☐ **[...]** (...): See the assignment conditions on page 118. When the state of the assigned input or bit changes to 1, the traverse control operating time is reset to zero, along with [Decrease ref. speed] (dtF).		[No] (nO)

Buy: www.ValinOnline.com | Phone 844-385-3099 | Email: CustomerService@valin.com

Evacuation function

The evacuation function is designed for "elevator" applications. It is only accessible for MT4 (380/480 V) drives, up to 75 kW (100 HP) only.
When an elevator is stuck between 2 floors due to a power outage, it must be possible to evacuate its occupants within a reasonable period of time.
This function requires an emergency power supply to be connected to the drive.
This power supply is at a reduced voltage, and only allows a derated operating mode, at reduced speed, but with full torque.

The function requires:
- One logic input to control "evacuation" operation
- Reduction of the voltage monitoring threshold
- An appropriate low speed reference

Following a power outage and **turning off of the drive**, the latter can be powered up again without going into [Undervoltage] (USF) fault mode if the corresponding control bit or logic input is at 1 at the same time. It is then possible to control ascent (FW) or descent (RV).

CAUTION

- This input must not be at 1 when the drive is powered from the line supply. To ensure this and also avoid any short-circuits, supply changeover contactors must be used.
- Set this input to 0 before connecting the emergency power supply to the line supply.

Failure to follow these instructions can result in equipment damage.

Code	Name/Description	Adjustment range	Factory setting
rFt-	**[EVACUATION]** Function only accessible for MT●●●N4 (380/480 V) drives, up to 75 kW (100 HP) only.		
rFt- nO LI1 - LI14	**[Evacuation assign.]** ☐ **[No]** (nO): Function not assigned. ☐ **[LI1]** (LI1) to **[LI6]** (LI6) ☐ **[LI7]** (LI7) to **[LI10]** (LI10): If MT-VW3A3201 logic I/O card has been inserted ☐ **[LI11]** (LI11) to **[LI14]** (LI14): If MT-VW3A3202 extended I/O card has been inserted. Evacuation is activated when the assigned input is at 1, if the drive is stationary. Evacuation is activated when the assigned input is at 0, as soon as the drive stops.		[No] (nO)
rSU	**[Evacuation Input V.]** Minimum permissible AC voltage value of the emergency power supply. The parameter can be accessed if [Evacuation assign.] (rFt) is not [No] (nO).	220 to 320 V	220 V
rSP ( )	**[Evacuation freq.]** Value of the "evacuation" mode frequency reference. The parameter can be accessed if [Evacuation assign.] (rFt) is not [No] (nO). The adjustment range is determined by the [Low speed] (LSP) (page 51), [Rated motor freq.] (FrS) and [Rated motor volt.] (UnS) (page 64) parameters and by [Evacuation Input V.] (rSU) above. • If LSP < (Frs x rSU/UnS): rSP min. = LSP, rSP max. = (Frs x rSU/UnS) • If LSP ⩾ (Frs x rSU/UnS): rSP = (Frs x rSU/UnS).		5 Hz

( ) Parameter that can be modified during operation or when stopped.

Buy: www.ValinOnline.com | Phone 844-385-3099 | Email: CustomerService@valin.com

Half floor

The "half floor" function is designed for "elevator" applications.
When an elevator sets off from floors and half floors, the cycle time for half floors can be too long, as the elevator does not have time to reach full speed before crossing the slowdown limit switch. As a result, the slowdown time is unnecessarily long.
The "half floor" function can be used to compensate this by not triggering slowdown until the speed reaches a preset threshold [Half-floor speed] (HLS) in order that the final part of the path will be the same as for a standard floor.

The graphs below illustrate the various operating scenarios with and without the function:

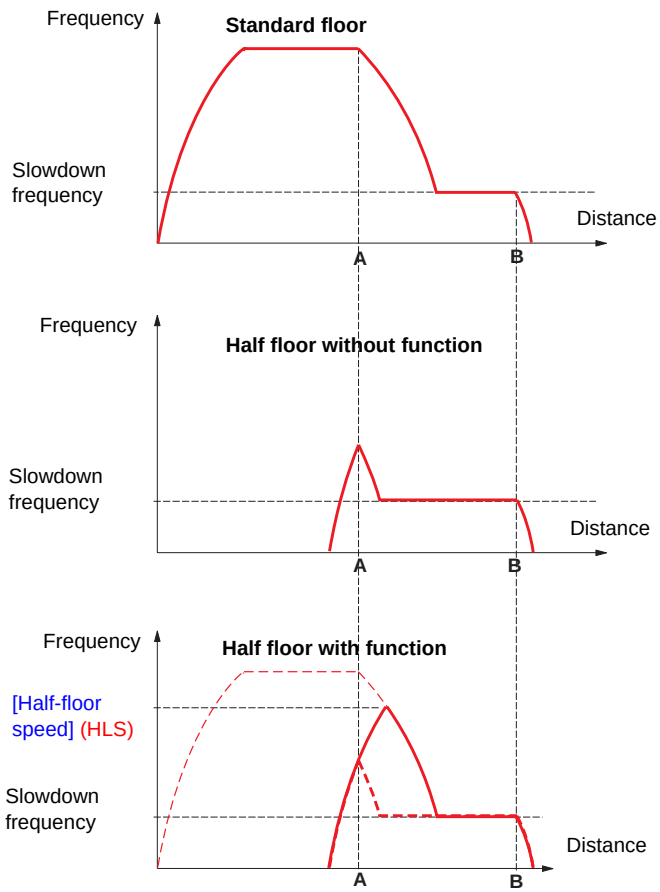

A: Slowdown limit switch reached
B: Stop limit switch reached

The function is only activated if, when the slowdown limit switch is tripped, the motor frequency is less than [Half-floor speed] (HLS). Acceleration is then maintained up to this value prior to slowing down.
The final part of the path is identical to that of the standard floor.

Code	Name/Description	Adjustment range	Factory setting
HFF-	**[HALF FLOOR]**		
HLS	**[Half-floor speed]** Activation and adjustment of the "half floor" function. This function has priority over all speed reference functions (preset speeds, for example) with the exception of those generated via fault monitoring (fallback speed, for example). ☐ **[No]** (nO): Function inactive ☐ **0.1 Hz to 500.0 Hz**: Activation of the function by adjusting the motor frequency to be reached prior to slowing down.		[No] (nO)
nO -			

Buy: www.ValinOnline.com | Phone 844-385-3099 | Email: CustomerService@valin.com

Direct power supply via DC bus

This function is only accessible for MT drives rated above 18.5 kW (25 HP)

Direct power supply via the DC bus requires a protected direct current source with adequate power and voltage as well as a suitably dimensioned resistor and capacitor precharging contactor. Consult Schneider Electric for information about specifying these components.

The "direct power supply via DC bus" function can be used to control the precharging contactor via a relay or a logic input on the drive.

Example circuit using R2 relay:

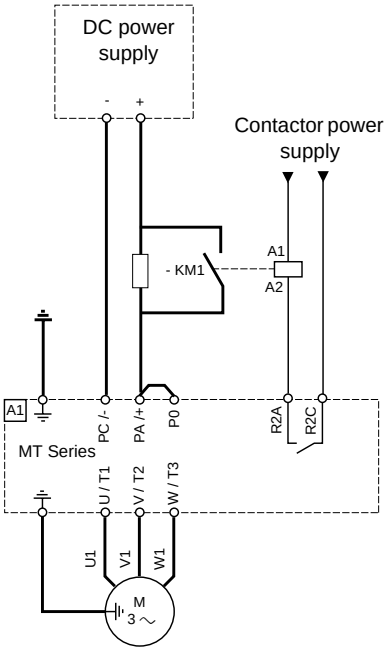

Code	Name/Description	Adjustment range	Factory setting
dCO-	**[DC BUS SUPPLY]** This function is only accessible for MT●●●M3 drives ≥ 18.5 kW (25 HP) and MT●●●N4 drives 18.5 kW (25 HP).		
dCO	❑ **[Precharge cont. ass.]** Logic output or control relay ☐ **[No]** (nO): Function not assigned. ☐ **[LO1]** (LO1) to **[LO4]** (LO4): Logic output (if one or two I/O cards have been inserted, LO1 to LO2 or LO4 can be selected). **[R2]** (r2) to **[R4]** (r4): Relay (selection of R2 extended to R3 or R4 if one or two I/O cards have been inserted). ☐ **[dO1]** (dO1): Analog output AO1 functioning as a logic output. Selection can be made if [AO1 assignment] (AO1) page 105 = [No] (nO).	[No] (nO)	
nO			
LO1			
-			
LO4			
r2			
-			
r4			
dO1			

Buy: www.ValinOnline.com | Phone 844-385-3099 | Email: CustomerService@valin.com

[1.8 FAULT MANAGEMENT] (FLt-)

Using graphic display keypad:

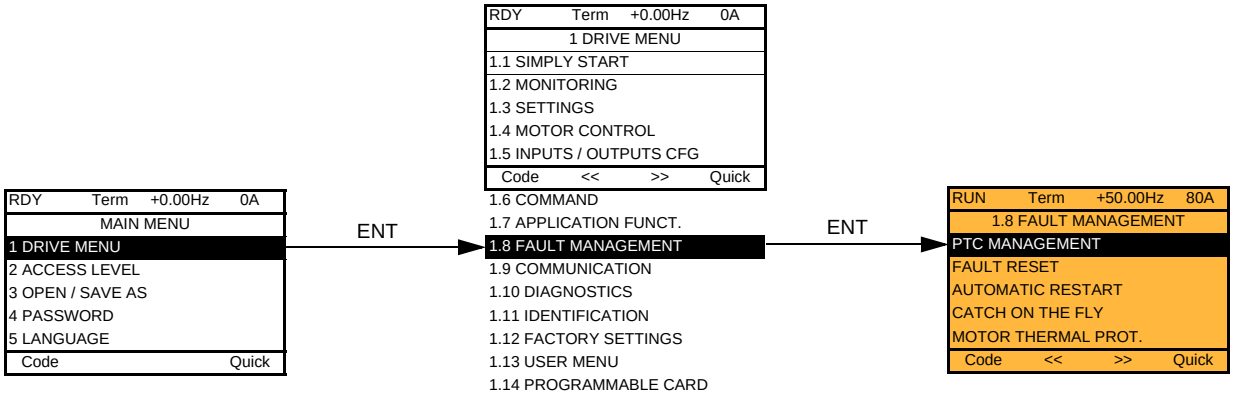

Using integrated display keypad:

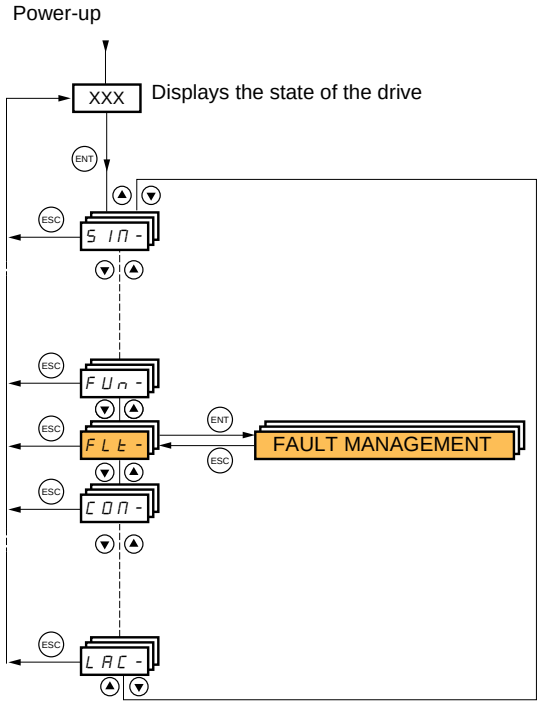

Summary of functions:

Code	Name	Page
PtC-	[PTC MANAGEMENT]	209
rSt-	[FAULT RESET]	210
Atr-	[AUTOMATIC RESTART]	211
FLr-	[CATCH ON THE FLY]	212
tHt-	[MOTOR THERMAL PROT.]	214
OPL-	[OUTPUT PHASE LOSS]	214
IPL-	[INPUT PHASE LOSS]	215
OHL-	[DRIVE OVERHEAT]	215
SAt-	[THERMAL ALARM STOP]	216
EtF-	[EXTERNAL FAULT]	217
USb-	[UNDERVOLTAGE MGT]	218
tIt-	[IGBT TESTS]	219
LFL-	[4-20mA LOSS]	220
InH-	[FAULT INHIBITION]	221
CLL-	[COM. FAULT MANAGEMENT]	222
Sdd-	[ENCODER FAULT]	223
tId-	[TORQUE OR I LIM. DETECT]	223
FqF-	[FREQUENCY METER]	225
dLd-	[DYNAMIC LOAD DETECT.]	227
brP-	[DB RES. PROTECTION]	228
bUF-	[BU PROTECTION]	228
tnF-	[AUTO TUNING FAULT]	228
PPI-	[CARDS PAIRING]	229
LFF-	[FALLBACK SPEED]	230
FSt-	[RAMP DIVIDER]	230
dCI-	[DC INJECTION]	230

Buy: www.ValinOnline.com | Phone 844-385-3099 | Email: CustomerService@valin.com

[1.8 FAULT MANAGEMENT] (FLt-)

The parameters in the [1.8 FAULT MANAGEMENT] (FLt-) menu can only be modified when the drive is stopped and there is no run command, except for parameters with a ↻ symbol in the code column, which can be modified with the drive running or stopped.

PTC probes

3 sets of PTC probes can be managed by the drive in order to protect the motors:

- 1 on logic input LI6 converted for this use by switch "**SW2**" on the control card.
- 1 on each of the 2 option cards MT-VW3A3201 and MT-VW3A3202.

Each of these sets of PTC probes is monitored for the following faults:

- Motor overheating
- Sensor break fault
- Sensor short-circuit fault

Protection via PTC probes does not disable protection via I^2t calculation performed by the drive (the two types of protection can be combined).

Buy: www.ValinOnline.com | Phone 844-385-3099 | Email: CustomerService@valin.com

Code	Name/Description	Adjustment range	Factory setting
PtC-	**[PTC MANAGEMENT]**		
PtCL	**[LI6 = PTC probe]** Can be accessed if switch **SW2** on the control card is set to PTC. nO **[No]** (nO): Not used AS **[Always]** (AS): "PTC probe" faults are monitored permanently, even if the power supply is not connected (as long as the control remains connected to the power supply). rdS **[Power ON]** (rdS): "PTC probe" faults are monitored while the drive power supply is connected. rS **[Motor ON]** (rS): "PTC probe" faults are monitored while the motor power supply is connected.		[No] (nO)
PtC1	**[PTC1 probe]** Can be accessed if a MT-VW3A3201 option card has been inserted. nO **[No]** (nO): Not used AS **[Always]** (AS): "PTC probe" faults are monitored permanently, even if the power supply is not connected (as long as the control remains connected to the power supply). rdS **[Power ON]** (rdS): "PTC probe" faults are monitored while the drive power supply is connected. rS **[Motor ON]** (rS): "PTC probe" faults are monitored while the motor power supply is connected.		[No] (nO)
PtC2	**[PTC2 probe]** Can be accessed if a MT-VW3A3202 option card has been inserted. nO **[No]** (nO): Not used AS **[Always]** (AS): "PTC probe" faults are monitored permanently, even if the power supply is not connected (as long as the control remains connected to the power supply). rdS **[Power ON]** (rdS): "PTC probe" faults are monitored while the drive power supply is connected. rS **[Motor ON]** (rS): "PTC probe" faults are monitored while the motor power supply is connected.		[No] (nO)

Buy: www.ValinOnline.com | Phone 844-385-3099 | Email: CustomerService@valin.com

Code	Name/Description	Adjustment range	Factory setting
rSt-	**[FAULT RESET]**		
rSF	**[Fault reset]**		[No] (nO)

Manual fault reset

- nO **[No]** (nO): Function inactive
- LI1 **[LI1]** (LI1) to **[LI6]** (LI6)
- - **[LI7]** (LI7) to **[LI10]** (LI10): If MT-VW3A3201 logic I/O card has been inserted
- - **[LI11]** (LI11) to **[LI14]** (LI14): If MT-VW3A3202 extended I/O card has been inserted
- C101 **[C101]** (C101) to **[C115]** (C115): With integrated Modbus in [I/O profile] (IO)
- - **[C201]** (C201) to **[C215]** (C215): With integrated CANopen in [I/O profile] (IO)
- - **[C301]** (C301) to **[C315]** (C315): With a communication card in [I/O profile] (IO)
- - **[C401]** (C401) to **[C415]** (C415): Not applicable
- Cd00 **[CD00]** (Cd00) to **[CD13]** (Cd13): In [I/O profile] (IO) can be switched with possible logic inputs
- - **[CD14]** (Cd14) to **[CD15]** (Cd15): In [I/O profile] (IO) can be switched without logic inputs

Faults are reset when the assigned input or bit changes to 1, if the cause of the fault has disappeared.
The STOP/RESET button on the graphic display terminal performs the same function.
See pages 257 to 261 for a list of faults that can be reset manually.

rP	**[Product reset]**		[No] (nO)

Parameter can only be accessed in [ACCESS LEVEL] = [Expert] mode.
Drive reinitialization. Can be used to reset all faults without having to disconnect the drive from the power supply.

- nO **[No]** (nO): Function inactive
- YES **[Yes]** (YES): Reinitialization. Press and hold down the "ENT" key for 2 s. The parameter changes back to [No] (nO) automatically as soon as the operation is complete. The drive can only be reinitialized when locked.

CAUTION

Make sure that the cause of the fault that led to the drive locking has been removed before reinitializing.
Failure to follow this instruction can result in equipment damage.

rPA	**[Product reset assig.]**		[No] (nO)

Parameter can only be modified in [ACCESS LEVEL] = [Expert] mode.
Drive reinitialization via logic input. Can be used to reset all faults without having to disconnect the drive from the power supply. The drive is reinitialized on a rising edge (change from 0 to 1) of the assigned input. The drive can only be reinitialized when locked.

- nO **[No]** (nO): Function inactive
- LI1 **[LI1]** (LI1) to **[LI6]** (LI6)
- - **[LI7]** (LI7) to **[LI10]** (LI10): If MT-VW3A3201 logic I/O card has been inserted
- LI14 **[LI11]** (LI11) to **[LI14]** (LI14): If MT-VW3A3202 extended I/O card has been inserted.

To assign reinitialization, press and hold down the "ENT" key for 2 s.

CAUTION

Make sure that the cause of the fault that led to the drive locking has been removed before reinitializing.
Failure to follow this instruction can result in equipment damage.

Buy: www.ValinOnline.com | Phone 844-385-3099 | Email: CustomerService@valin.com

Code	Name/Description	Adjustment range	Factory setting
Atr-	**[AUTOMATIC RESTART]**		
Atr nO YES	**[Automatic restart]** ☐ **[No]** (nO): Function inactive ☐ **[Yes]** (YES): Automatic restart, after locking on a fault, if the fault has disappeared and the other operating conditions permit the restart. The restart is performed by a series of automatic attempts separated by increasingly longer waiting periods: 1 s, 5 s, 10 s, then 1 minute for the following attempts. The drive fault relay remains activated if this function is active. The speed reference and the operating direction must be maintained. Use 2-wire control ([2/3 wire control] (tCC) = [2 wire] (2C) and [2 wire type] (tCt) = [Level] (LEL) see page 83). **⚠ WARNING** **UNINTENDED EQUIPMENT OPERATION** **Check that an automatic restart will not endanger personnel or equipment in any way.** **Failure to follow these instructions can result in death or serious injury.** If the restart has not taken place once the configurable time tAr has elapsed, the procedure is aborted and the drive remains locked until it is turned off and then on again. The faults, which permit this function, are listed on page 260:		[No] (nO)
tAr 5 10 30 1h 2h 3h Ct	**[Max. restart time]** ☐ **[5 min]** (5): 5 minutes ☐ **[10 minutes]** (10): 10 minutes ☐ **[30 minutes]** (30): 30 minutes ☐ **[1 hour]** (1h): 1 hour ☐ **[2 hours]** (2h): 2 hours ☐ **[3 hours]** (3h): 3 hours ☐ **[Unlimited]** (Ct): Unlimited This parameter appears if [Automatic restart] (Atr) = [Yes] (YES). It can be used to limit the number of consecutive restarts on a recurrent fault.		[5 minutes] (5)

Buy: www.ValinOnline.com | Phone 844-385-3099 | Email: CustomerService@valin.com

Code	Name/Description	Adjustment range	Factory setting
FLr-	**[CATCH ON THE FLY]** **Note:** This function cannot be used with certain other functions. Follow the instructions on page 124.		
FLr nO YES	**[Catch on the fly]** Used to enable a smooth restart if the run command is maintained after the following events: • Loss of line supply or disconnection • Reset of current fault or automatic restart • Freewheel stop. The speed given by the drive resumes from the estimated speed of the motor at the time of the restart, then follows the ramp to the reference speed. This function requires 2-wire level control. ☐ **[No]** (nO): Function inactive ☐ **[Yes]** (YES): Function active When the function is operational, it activates at each run command, resulting in a slight delay of the current (0.5 s max.). [Catch on the fly] (FLr) is forced to[No] (nO) if the braking command [Brake assignment] (bLC) is assigned (page 154) or if, in open-loop control, [Auto DC injection] (AdC) page 136 = [Continuous] (Ct).	[No] (nO)	
UCb ( )	**[Sensitivity]** The parameter can be accessed on units rated at or above 55 kW (75 HP) at 230V and at or above 90 kW (125 HP) at 460V Adjusts the catch-on-the-fly sensitivity around the zero speed. Decrease the value if the drive is not able to perform the catch on the fly, and increase it if the drive locks on a fault as it performs the catch on the fly.	0.4 to 15%	0.6%

( ) Parameter that can be modified during operation or when stopped.

Buy: www.ValinOnline.com | Phone 844-385-3099 | Email: CustomerService@valin.com

Motor thermal protection

Function:

Thermal protection by calculating the I^2t.

Note: The memory of the motor thermal state is saved when the drive is switched off. The power-off time is used to recalculate the thermal state the next time the drive is switched on.

- Naturally-cooled motors:
  The tripping curves depend on the motor frequency.
- Force-cooled motors:
  Only the 50 Hz tripping curve needs to be considered, regardless of the motor frequency.

Trip time in seconds

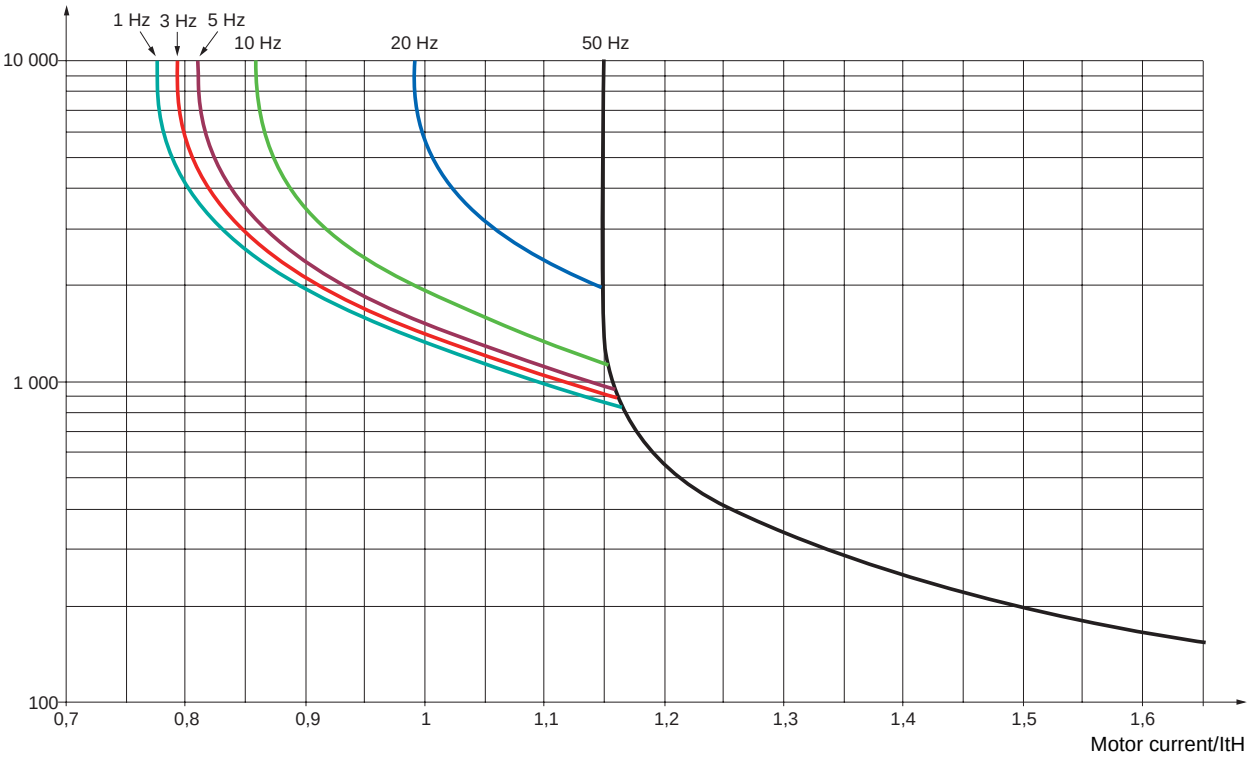

Buy: www.ValinOnline.com | Phone 844-385-3099 | Email: CustomerService@valin.com

Code	Name/Description	Adjustment range	Factory setting
tHt-	**[MOTOR THERMAL PROT.]**		
tHt	**[Motor protect. type]** ☐ **[No]** (nO): No protection. ☐ **[Self cooled]** (ACL): For self-cooled motors ☐ **[Force-cool]** (FCL): For force-cooled motors **Note:** A fault trip will occur when the thermal state reaches 118% of the rated state and reactivation will occur when the state falls back below 100%.		[Self cooled] (ACL)
ttd	**[Motor therm. level]** (1) Trip threshold for motor thermal alarm (logic output or relay)	0 to 118%	100%
ttd2	**[Motor2 therm. level]** Trip threshold for motor 2 thermal alarm (logic output or relay)	0 to 118%	100%
ttd3	**[Motor3 therm. level]** Trip threshold for motor 3 thermal alarm (logic output or relay)	0 to 118%	100%
OLL	**[Overload fault mgt]** Type of stop in the event of a motor thermal fault. ☐ **[Ignore]** (nO): Fault ignored. ☐ **[Freewheel]** (YES): Freewheel stop. ☐ **[Per STT]** (Stt): Stop according to configuration of [Type of stop] (Stt) page 134, without fault tripping. In this case the fault relay does not open and the drive is ready to restart as soon as the fault disappears, according to the restart conditions of the active command channel (e.g., according to [2/3 wire control] (tCC) and [2 wire type] (tCt) page 83 if control is via the terminals). Configuring an alarm for this fault is recommended (assigned to a logic output, for example) in order to indicate the cause of the stop. ☐ **[fallback spd]** (LFF): Change to fallback speed, maintained as long as the fault persists and the run command has not been removed (2). ☐ **[Spd maint.]** (rLS): The drive maintains the speed being applied when the fault occurred, as long as the fault is present and the run command has not been removed (2). ☐ **[Ramp stop]** (rMP): Stop on ramp. ☐ **[Fast stop]** (FSt): Fast stop. ☐ **[DC injection]** (dCI): DC injection stop. This type of stop cannot be used with certain other functions. See table on page 124.		[Freewheel] (YES)
OPL-	**[OUTPUT PHASE LOSS]**		
OPL	**[Output Phase Loss]** ☐ **[No]** (nO): Function inactive ☐ **[Yes]** (YES): Tripping on OPF fault with freewheel stop. ☐ **[Output cut]** (OAC): No fault triggered, but management of the output voltage in order to avoid an overcurrent when the link with the motor is re-established and catch on the fly performed (even if this function has not been configured). **Note:** [Output Phase Loss] (OPL) is forced to [Yes] (YES) if brake logic control is configured (see page 154).		[Yes] (YES)
Odt	**[OutPh time detect]** Time delay for taking the [Output Phase Loss] (OPL) fault into account.	0.5 to 10 s	0.5 s

(1) The parameter can also be accessed in the [1.3 SETTINGS] (SEt-)menu.
(2) Because, in this case, the fault does not trigger a stop, it is essential to assign a relay or logic output to its indication.

Parameter that can be modified during operation or when stopped.

Buy: www.ValinOnline.com | Phone 844-385-3099 | Email: CustomerService@valin.com

IPL -	**[INPUT PHASE LOSS]**		
IPL	**[Input phase loss]** nO YES		According to drive rating
	☐ **[Ignore]** (nO): Fault ignored, to be used when the drive is supplied via a single phase supply or by the DC bus. ☐ **[Freewheel]** (YES): Fault with freewheel stop. If one phase disappears, the drive switches to fault mode [Input phase loss] (IPL) but if 2 or 3 phases disappear, the drive continues to operate until it trips on an undervoltage fault. Factory setting: [Ignore] (nO) for MT2P5 to MT203, [Freewheel] (YES) for all others.		
OHL -	**[DRIVE OVERHEAT]**		
OHL	**[Overtemp fault mgt]** nO YES Stt LFF rLS rMP FSt dCI		[Freewheel] (YES)
	Behavior in the event of the drive overheating ☐ **[Ignore]** (nO): Fault ignored. ☐ **[Freewheel]** (YES): Freewheel stop. ☐ **[Per STT]** (Stt): Stop according to configuration of [Type of stop] (Stt) page 134, without fault tripping. In this case the fault relay does not open and the drive is ready to restart as soon as the fault disappears, according to the restart conditions of the active command channel (e.g., according to [2/3 wire control] (tCC) and [2 wire type] (tCt) page 83 if control is via the terminals). Configuring an alarm for this fault is recommended (assigned to a logic output, for example) in order to indicate the cause of the stop. ☐ **[fallback spd]** (LFF): Change to fallback speed, maintained as long as the fault persists and the run command has not been removed (1). ☐ **[Spd maint.]** (rLS): The drive maintains the speed being applied when the fault occurred, as long as the fault is present and the run command has not been removed (1). ☐ **[Ramp stop]** (rMP): Stop on ramp. ☐ **[Fast stop]** (FSt): Fast stop. ☐ **[DC injection]** (dCI): DC injection stop. This type of stop cannot be used with certain other functions. See table on page 124. **Note:** A fault trip will occur when the thermal state reaches 118% of the rated state and reactivation will occur when the state falls back below 90%.		
tHA ( )	**[Drv therm. state al]** Trip threshold for drive thermal alarm (logic output or relay)	0 to 118%	100%

( ) Parameter that can be modified during operation or when stopped.

(1) Because, in this case, the fault does not trigger a stop, it is essential to assign a relay or logic output to its indication.

Buy: www.ValinOnline.com | Phone 844-385-3099 | Email: CustomerService@valin.com

Deferred stop on thermal alarm

This function is designed in particular for elevator applications. It prevents the elevator stopping between two floors if the drive or motor overheats, by authorizing operation until the next stop. At the next stop, the drive is locked until the thermal state falls back to a value, which undershoots the set threshold by 20%. Example: A trip threshold set at 80% enables reactivation at 60%.
One thermal state threshold must be defined for the drive, and one thermal state threshold for the motor(s), which will trip the deferred stop.

Code	Name/Description	Adjustment range	Factory setting
SAt -	■ [THERMAL ALARM STOP]		
SAt nO YES	❑ [Thermal alarm stop] ☐ [No] (nO) : Function inactive (in this case, the following parameters cannot be accessed) ☐ [Yes] (YES) : Freewheel stop on drive or motor thermal alarm **CAUTION** **The drive and motor are no longer protected in the event of thermal alarm stops. This invalidates the warranty.** **Check that the possible consequences do not present any risk.** **Failure to follow this instruction can result in equipment damage.**		[No] (nO)
tHA ( )	❑ [Drv therm. state al] Thermal state threshold of the drive tripping the deferred stop.	0 to 118%	100%
ttd ( )	❑ [Motor therm. level] Thermal state threshold of the motor tripping the deferred stop.	0 to 118%	100%
ttd2 ( )	❑ [Motor2 therm. level] Thermal state threshold of the motor 2 tripping the deferred stop.	0 to 118%	100%
ttd3 ( )	❑ [Motor3 therm. level] Thermal state threshold of the motor 3 tripping the deferred stop.	0 to 118%	100%

( ) Parameter that can be modified during operation or when stopped.

Buy: www.ValinOnline.com | Phone 844-385-3099 | Email: CustomerService@valin.com

Code	Name/Description	Adjustment range	Factory setting
EtF-	**[EXTERNAL FAULT]**		
EtF	**[External fault ass.]** nO LI1 - - - ☐ **[No]** (nO): Function inactive ☐ **[LI1]** (LI1) : : ☐ **[...]** (...) : See the assignment conditions on page 118. If the assigned bit is at 0, there is no external fault. If the assigned bit is at 1, there is an external fault. Logic can be configured via [External fault config] (LEt) if a logic input has been assigned.		[No] (nO)
LEt	**[External fault config]** Parameter can be accessed if the external fault has been assigned to a logic input. It defines the positive or negative logic of the input assigned to the fault. LO ☐ **[Active low]** (LO): Fault on falling edge (change from 1 to 0) of the assigned input. HIG ☐ **[Active high]** (HIG): Fault on rising edge (change from 0 to 1) of the assigned input.		[Active high] (HIG)
EPL	**[External fault mgt]** Type of stop in the event of an external fault nO ☐ **[Ignore]** (nO): Fault ignored. YES ☐ **[Freewheel]** (YES): Freewheel stop. Stt ☐ **[Per STT]** (Stt): Stop according to configuration of [Type of stop] (Stt) page 134, without fault tripping. In this case the fault relay does not open and the drive is ready to restart as soon as the fault disappears, according to the restart conditions of the active command channel (e.g., according to [2/3 wire control] (tCC) and [2 wire type] (tCt) page 83 if control is via the terminals). Configuring an alarm for this fault is recommended (assigned to a logic output, for example) in order to indicate the cause of the stop. LFF ☐ **[fallback spd]** (LFF): Change to fallback speed, maintained as long as the fault persists and the run command has not been removed (1). rLS ☐ **[Spd maint.]** (rLS): The drive maintains the speed being applied when the fault occurred, as long as the fault is present and the run command has not been removed (1). rMP ☐ **[Ramp stop]** (rMP): Stop on ramp. FSt ☐ **[Fast stop]** (FSt): Fast stop. dCI ☐ **[DC injection]** (dCI): DC injection stop. This type of stop cannot be used with certain other functions. See table on page 124.		[Freewheel] (YES)

(1) Because, in this case, the fault does not trigger a stop, it is essential to assign a relay or logic output to its indication.

Buy: www.ValinOnline.com | Phone 844-385-3099 | Email: CustomerService@valin.com

Code	Name/Description	Adjustment range	Factory setting
USb-	**[UNDERVOLTAGE MGT]**		
USb	**[UnderV. fault mgt]** Behavior of the drive in the event of an undervoltage 0 ☐ **[Flt&R1open]** (0): Fault and fault relay open. 1 ☐ **[Flt&R1close]** (1): Fault and fault relay closed. 2 ☐ **[Alarm]** (2): Alarm and fault relay remains closed. The alarm can be assigned to a logic output or a relay.		[Flt&R1open] (0)
UrES	**[Mains voltage]** Rated voltage of the line supply in V. For MT2●●● : 200 ☐ **[200V ac]** (200): 200 Volts AC 220 ☐ **[220V ac]** (220): 220 Volts AC 240 ☐ **[240V ac]** (240): 240 Volts AC 260 ☐ **[260V ac]** (260): 260 Volts AC (factory setting) For MT4●●● : 380 ☐ **[380V ac]** (380): 380 Volts AC 400 ☐ **[400V ac]** (400): 400 Volts AC 440 ☐ **[440V ac]** (440): 440 Volts AC 460 ☐ **[460V ac]** (460): 460 Volts AC 480 ☐ **[480V ac]** (480): 480 Volts AC (factory setting)	According to drive voltage rating	According to drive voltage rating
USL	**[Undervoltage level]** Undervoltage fault trip level setting in V. The adjustment range and factory setting are determined by the drive voltage rating and the [Mains voltage] (UrES) value.		
USt	**[Undervolt. time out]** Time delay for taking undervoltage fault into account	0.2 s to 999.9 s	0.2 s
StP	**[UnderV. prevention]** Behavior in the event of the undervoltage fault prevention level being reached nO ☐ **[No]** (nO): No action MMS ☐ **[DC Maintain]** (MMS): This stop mode uses the inertia to maintain the DC bus voltage as long as possible. rMP ☐ **[Ramp stop]** (rMP): Stop following an adjustable ramp [Max stop time] (StM). LnF ☐ **[Lock-out]** (LnF): Lock (freewheel stop) without fault		[No] (nO)
tSM	**[UnderV. restart tm]** Time delay before authorizing the restart after a complete stop for [UnderV. prevention] (StP) = [Ramp stop] (rMP), if the voltage has returned to normal.	1.0 s to 999.9 s	1.0 s
UPL	**[Prevention level]** Undervoltage fault prevention level setting in V, which can be accessed if [UnderV. prevention] (StP) is not [No] (nO). The adjustment range and factory setting are determined by the drive voltage rating and the [Mains voltage] (UrES) value.		
StM ( )	**[Max stop time]** Ramp time if [UnderV. prevention] (StP) = [Ramp stop] (rMP).	0.01 to 60.00 s	1.00 s
tbS ( )	**[DC bus maintain tm]** DC bus maintain time if [UnderV. prevention] (StP) = [DC Maintain] (MMS).	1 to 9999 s	9999 s

( ) Parameter that can be modified during operation or when stopped.

Buy: www.ValinOnline.com | Phone 844-385-3099 | Email: CustomerService@valin.com

Code	Name/Description	Adjustment range	Factory setting
tIt-	**[IGBT TESTS]**		
Strt nO YES	**[IGBT test]** ☐ **[No]** (nO): No test ☐ **[Yes]** (YES): The IGBTs are tested on power up and every time a run command is sent. These tests cause a slight delay (a few ms). In the event of a fault, the drive will trip. The following faults can be detected: - Drive output short-circuit (terminals U-V-W): SCF display - IGBT faulty: xtF, where x indicates the number of the IGBT concerned - IGBT short-circuited: x2F, where x indicates the number of the IGBT concerned		[No] (nO)

Buy: www.ValinOnline.com | Phone 844-385-3099 | Email: CustomerService@valin.com

Code	Name/Description	Adjustment range	Factory setting
LFL-	**[4-20mA LOSS]**		
LFL2	**[AI2 4-20mA loss]**		[Ignore] (nO)
nO	☐ **[Ignore]** (nO): Fault ignored. This configuration is the only one possible if [AI2 min. value] (CrL2) page 89 is not greater than 3 mA or if [AI2 Type] (AI2t) page 89 = [Voltage] (10U).		
YES	☐ **[Freewheel]** (YES): Freewheel stop.		
Stt	☐ **[Per STT]** (Stt): Stop according to configuration of [Type of stop] (Stt) page 134, without fault tripping. In this case the fault relay does not open and the drive is ready to restart as soon as the fault disappears, according to the restart conditions of the active command channel (e.g., according to [2/3 wire control] (tCC) and [2 wire type] (tCt) page 83 if control is via the terminals). Configuring an alarm for this fault is recommended (assigned to a logic output, for example) in order to indicate the cause of the stop.		
LFF	☐ **[fallback spd]** (LFF): Change to fallback speed, maintained as long as the fault persists and the run command has not been removed (1).		
rLS	☐ **[Spd maint.]** (rLS): The drive maintains the speed being applied when the fault occurred, as long as the fault is present and the run command has not been removed (1).		
rMP	☐ **[Ramp stop]** (rMP): Stop on ramp.		
FSt	☐ **[Fast stop]** (FSt): Fast stop.		
dCI	☐ **[DC injection]** (dCI): DC injection stop. This type of stop cannot be used with certain other functions. See table on page 124.		
LFL3	**[AI3 4-20mA loss]**		[Ignore] (nO)
nO	☐ **[Ignore]** (nO): Fault ignored. This configuration is the only one possible if [AI3 min. value] (CrL3) page 90 is not greater than 3 mA.		
YES	☐ **[Freewheel]** (YES): Freewheel stop.		
Stt	☐ **[Per STT]** (Stt): Stop according to configuration of [Type of stop] (Stt) page 134, without fault tripping. In this case the fault relay does not open and the drive is ready to restart as soon as the fault disappears, according to the restart conditions of the active command channel (e.g., according to [2/3 wire control] (tCC) and [2 wire type] (tCt) page 83 if control is via the terminals). Configuring an alarm for this fault is recommended (assigned to a logic output, for example) in order to indicate the cause of the stop.		
LFF	☐ **[fallback spd]** (LFF): Change to fallback speed, maintained as long as the fault persists and the run command has not been removed (1).		
rLS	☐ **[Spd maint.]** (rLS): The drive maintains the speed being applied when the fault occurred, as long as the fault is present and the run command has not been removed (1).		
rMP	☐ **[Ramp stop]** (rMP): Stop on ramp.		
FSt	☐ **[Fast stop]** (FSt): Fast stop.		
dCI	☐ **[DC injection]** (dCI): DC injection stop. This type of stop cannot be used with certain other functions. See table on page 124.		
LFL4	**[AI4 4-20mA loss]**		[Ignore] (nO)
nO	☐ **[Ignore]** (nO): Fault ignored. This configuration is the only one possible if [AI4 min. value] (CrL4) page 91 is not greater than 3 mA or if [AI4 Type] (AI4t) page 91 = [Voltage] (10U).		
YES	☐ **[Freewheel]** (YES): Freewheel stop.		
Stt	☐ **[Per STT]** (Stt): Stop according to configuration of [Type of stop] (Stt) page 134, without fault tripping. In this case the fault relay does not open and the drive is ready to restart as soon as the fault disappears, according to the restart conditions of the active command channel (e.g., according to [2/3 wire control] (tCC) and [2 wire type] (tCt) page 83 if control is via the terminals). Configuring an alarm for this fault is recommended (assigned to a logic output, for example) in order to indicate the cause of the stop.		
LFF	☐ **[fallback spd]** (LFF): Change to fallback speed, maintained as long as the fault persists and the run command has not been removed (1).		
rLS	☐ **[Spd maint.]** (rLS): The drive maintains the speed being applied when the fault occurred, as long as the fault is present and the run command has not been removed (1).		
rMP	☐ **[Ramp stop]** (rMP): Stop on ramp.		
FSt	☐ **[Fast stop]** (FSt): Fast stop.		
dCI	☐ **[DC injection]** (dCI): DC injection stop. This type of stop cannot be used with certain other functions. See table on page 124.		

(1) Because, in this case, the fault does not trigger a stop, it is essential to assign a relay or logic output to its indication.

Buy: www.ValinOnline.com | Phone 844-385-3099 | Email: CustomerService@valin.com

Parameter can be accessed in [Expert] **mode.**

Code	Name/Description	Adjustment range	Factory setting
InH-	**[FAULT INHIBITION]**		
InH	**[Fault inhibit assign.]**		[No] (nO)

To assign fault inhibit, press and hold down the “ENT” key for 2 s.

CAUTION

Inhibiting faults results in the drive not being protected. This invalidates the warranty.
Check that the possible consequences do not present any risk.
Failure to follow this instruction can result in equipment damage.

nO **[No]** (nO): Function inactive
LI1 **[LI1]** (LI1)
:
:
- **[...]** (...) : See the assignment conditions on page 118.

If the assigned input or bit is at 0, fault monitoring is active. If the assigned input or bit is at 1, fault monitoring is inactive. Active faults are reset on a rising edge (change from 0 to 1) of the assigned input or bit.

Note: The "Power Removal" function and any faults that prevent any form of operation are not affected by this function.
A list of faults affected by this function appears on pages 257 to 262.

Buy: www.ValinOnline.com | Phone 844-385-3099 | Email: CustomerService@valin.com

Code	Name/Description	Adjustment range	Factory setting
CLL-	**[COM. FAULT MANAGEMENT]**		
CLL	**[Network fault mgt]**		[Freewheel] (YES)
	Behavior of the drive in the event of a communication fault with a communication card		
nO	☐ **[Ignore]** (nO): Fault ignored.		
YES	☐ **[Freewheel]** (YES): Freewheel stop.		
Stt	☐ **[Per STT]** (Stt): Stop according to configuration of [Type of stop] (Stt) page 134, without fault tripping. In this case the fault relay does not open and the drive is ready to restart as soon as the fault disappears, according to the restart conditions of the active command channel (e.g., according to [2/3 wire control] (tCC) and [2 wire type] (tCt) page 83 if control is via the terminals). Configuring an alarm for this fault is recommended (assigned to a logic output, for example) in order to indicate the cause of the stop.		
LFF	☐ **[fallback spd]** (LFF): Change to fallback speed, maintained as long as the fault persists and the run command has not been removed (1).		
rLS	☐ **[Spd maint.]** (rLS): The drive maintains the speed being applied when the fault occurred, as long as the fault is present and the run command has not been removed (1).		
rMP	☐ **[Ramp stop]** (rMP): Stop on ramp.		
FSt	☐ **[Fast stop]** (FSt): Fast stop.		
dCI	☐ **[DC injection]** (dCI): DC injection stop. This type of stop cannot be used with certain other functions. See table on page 124.		
COL	**[CANopen fault mgt]**		[Freewheel] (YES)
	Behavior of the drive in the event of a communication fault with integrated CANopen		
nO	☐ **[Ignore]** (nO): Fault ignored.		
YES	☐ **[Freewheel]** (YES): Freewheel stop.		
Stt	☐ **[Per STT]** (Stt): Stop according to configuration of [Type of stop] (Stt) page 134, without fault tripping. In this case the fault relay does not open and the drive is ready to restart as soon as the fault disappears, according to the restart conditions of the active command channel (e.g., according to [2/3 wire control] (tCC) and [2 wire type] (tCt) page 83 if control is via the terminals). Configuring an alarm for this fault is recommended (assigned to a logic output, for example) in order to indicate the cause of the stop.		
LFF	☐ **[fallback spd]** (LFF): Change to fallback speed, maintained as long as the fault persists and the run command has not been removed (1).		
rLS	☐ **[Spd maint.]** (rLS): The drive maintains the speed being applied when the fault occurred, as long as the fault is present and the run command has not been removed (1).		
rMP	☐ **[Ramp stop]** (rMP): Stop on ramp.		
FSt	☐ **[Fast stop]** (FSt): Fast stop.		
dCI	☐ **[DC injection]** (dCI): DC injection stop. This type of stop cannot be used with certain other functions. See table on page 124.		
SLL	**[Modbus fault mgt]**		[Freewheel] (YES)
	Behavior of the drive in the event of a communication fault with integrated Modbus		
nO	☐ **[Ignore]** (nO): Fault ignored.		
YES	☐ **[Freewheel]** (YES): Freewheel stop.		
Stt	☐ **[Per STT]** (Stt): Stop according to configuration of [Type of stop] (Stt) page 134, without fault tripping. In this case the fault relay does not open and the drive is ready to restart as soon as the fault disappears, according to the restart conditions of the active command channel (e.g., according to [2/3 wire control] (tCC) and [2 wire type] (tCt) page 83 if control is via the terminals). Configuring an alarm for this fault is recommended (assigned to a logic output, for example) in order to indicate the cause of the stop.		
LFF	☐ **[fallback spd]** (LFF): Change to fallback speed, maintained as long as the fault persists and the run command has not been removed (1).		
rLS	☐ **[Spd maint.]** (rLS): The drive maintains the speed being applied when the fault occurred, as long as the fault is present and the run command has not been removed (1).		
rMP	☐ **[Ramp stop]** (rMP): Stop on ramp.		
FSt	☐ **[Fast stop]** (FSt): Fast stop.		
dCI	☐ **[DC injection]** (dCI): DC injection stop. This type of stop cannot be used with certain other functions. See table on page 124.		

(1) Because, in this case, the fault does not trigger a stop, it is essential to assign a relay or logic output to its indication.

Buy: www.ValinOnline.com | Phone 844-385-3099 | Email: CustomerService@valin.com

Code	Name/Description	Adjustment range	Factory setting
Sdd-	**[ENCODER FAULT]** Can be accessed if the encoder option card has been inserted and the encoder is used for speed feedback (see page 73).		
Sdd nO YES	**[Load slip detection]** ☐ **[No]** (nO): Fault not monitored. Only the alarm may be assigned to a logic output or a relay. ☐ **[Yes]** (YES): Fault monitored. The fault is triggered by comparison with the ramp output and the speed feedback, and is only effective for speeds greater than 10% of the [Rated motor freq.] (FrS), see page 64. In the event of a fault, the drive will switch to a freewheel stop, and if the brake logic control function has been configured, the brake command will be set to 0.		[No] (nO)
ECC nO YES	**[Encoder coupling]** ☐ **[No]** (nO): Fault not monitored. ☐ **[Yes]** (YES): Fault monitored. If the brake logic control function has been configured, the factory setting changes to [Yes] (YES). [Encoder coupling] (ECC) = [Yes] (YES) is only possible if [Load slip detection] (Sdd) = [Yes] (YES) and [Motor control type] (Ctt) page 66 = [FVC] (FUC) and [Brake assignment] (bLC) page 154 is not [No] (nO). The fault monitored is the break in the mechanical coupling of the encoder. In the event of a fault, the drive will switch to a freewheel stop, and if the brake logic control function has been configured, the brake command will be set to 0.		[No] (nO)
ECt	**[Encoder check time]** Encoder faults filtering time. The parameter can be accessed if [Encoder coupling] (ECC) = [Yes] (YES)	2 to 10 s	2 s
tId-	**[TORQUE OR I LIM. DETECT]**		
SSb nO YES Stt LFF rLS rMP FSt dCI	**[Trq/I limit. stop]** Behavior in the event of switching to torque or current limitation ☐ **[Ignore]** (nO): Fault ignored. ☐ **[Freewheel]** (YES): Freewheel stop. ☐ **[Per STT]** (Stt): Stop according to configuration of [Type of stop] (Stt) page 134, without fault tripping. In this case the fault relay does not open and the drive is ready to restart as soon as the fault disappears, according to the restart conditions of the active command channel (e.g., according to [2/3 wire control] (tCC) and [2 wire type] (tCt) page 83 if control is via the terminals). Configuring an alarm for this fault is recommended (assigned to a logic output, for example) in order to indicate the cause of the stop. ☐ **[fallback spd]** (LFF): Change to fallback speed, maintained as long as the fault persists and the run command has not been removed (1). ☐ **[Spd maint.]** (rLS): The drive maintains the speed being applied when the fault occurred, as long as the fault is present and the run command has not been removed (1). ☐ **[Ramp stop]** (rMP): Stop on ramp. ☐ **[Fast stop]** (FSt): Fast stop. ☐ **[DC injection]** (dCI): DC injection stop. This type of stop cannot be used with certain other functions. See table on page 124.		[Ignore] (nO)
StO ( )	**[Trq/I limit. time out]** (If fault has been configured) Time delay for taking SSF "Limitation" fault into account	0 to 9999 ms	1000 ms

( ) Parameter that can be modified during operation or when stopped.

(1) Because, in this case, the fault does not trigger a stop, it is essential to assign a relay or logic output to its indication.

Buy: www.ValinOnline.com | Phone 844-385-3099 | Email: CustomerService@valin.com

Use of the "Pulse input" input to measure the speed of rotation of the motor.

This function uses the "Pulse input" input from the VW3A3202 extension card and can, therefore, only be used if this card has been inserted and if the "Pulse input" input is not being used for another function.

Example of use

An indexed disk driven by the motor and connected to a proximity sensor can be used to generate a frequency signal that is proportional to the speed of rotation of the motor.

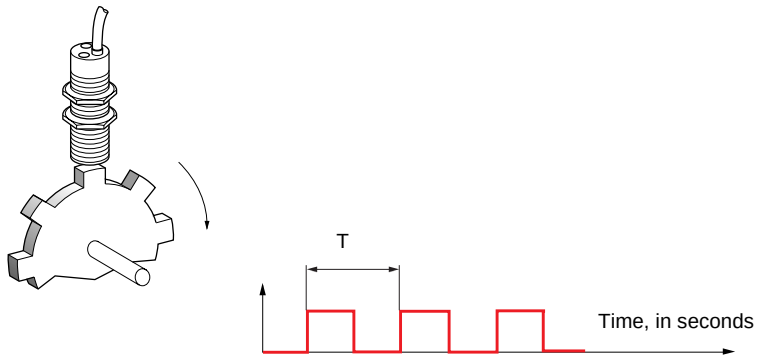

When applied to the "Pulse input" input, this signal supports:

- Measurement and display of the motor speed: signal frequency = 1/T. This frequency is displayed by means of the [Pulse in. work. freq.] (FqS) parameter, page 46 or 48.
- Overspeed detection (if the measured speed exceeds a preset threshold, the drive will trip on a fault).
- Brake failure detection, if brake logic control has been configured: If the speed does not drop sufficiently quickly following a command to engage the brake, the drive will trip on a fault. This function can be used to detect worn brake linings.
- Detection of a speed threshold that can be adjusted using [Pulse warning thd.] (FqL) page 62 and is assignable to a relay or logic output, see page 97.

Buy: www.ValinOnline.com | Phone 844-385-3099 | Email: CustomerService@valin.com

Code	Name/Description	Adjustment range	Factory setting
FqF-	**[FREQUENCY METER]** Can be accessed if a MT-VW3A3202 option card has been inserted		
FqF nO YES	**[Frequency meter]** Activation of the speed measurement function. ☐ **[No]** (nO): Function inactive, In this case, none of the function parameters can be accessed. ☐ **[Yes]** (YES): Function active, assignment only possible if no other functions have been assigned to the "Pulse input" input.		[No] (nO)
FqC	**[Pulse scal. divisor]** • Scaling factor for the "Pulse input" input (divisor). The frequency measured is displayed by means of the [Pulse in. work. freq.] (FqS) parameter, page 46 or 48.	1.0 to 100.0	1.0
FqA nO -	**[Overspd. pulse thd.]** Activation and adjustment of overspeed monitoring: [Overspeed] (SOF) fault. ☐ **[No]** (nO): No overspeed monitoring. ☐ **1 Hz to 30.00 Hz**: Adjustment of the frequency tripping threshold on the "Pulse input" input divided by [Pulse scal. divisor] (FqC).		[No] (nO)
tdS	**[Pulse overspd delay]** Time delay for taking overspeed fault into account	0.0 s to 10.0 s	0.0 s
Fdt nO -	**[Level fr. pulse ctrl]** Activation and adjustment of monitoring for the input Pulse input (speed feedback): [Speed fdback loss] (SPF) fault. ☐ **[No]** (nO): No monitoring of speed feedback. ☐ **0.1 Hz to 500.0 Hz**: Adjustment of the motor frequency threshold for tripping a speed feedback fault (difference between the estimated frequency and the measured speed).		[No] (nO)
Fqt nO -	**[Pulse thd. wo Run]** Activation and adjustment of brake failure monitoring: [Brake feedback] (brF). If brake logic control [Brake assignment] (bLC) page 154 is not configured, this parameter is forced to [No] (nO). ☐ **[No]** (nO): No brake monitoring. ☐ **1 Hz to 1000 Hz**: Adjustment of the motor frequency threshold for tripping abrake failure fault (detection of speeds other than zero).		[No] (nO)
tqb	**[Pulse thd. wo Run]** Time delay for taking brake failure fault into account.	0.0 s to 10.0 s	0.0 s

Buy: www.ValinOnline.com | Phone 844-385-3099 | Email: CustomerService@valin.com

Load variation detection

This detection is only possible with the "high-speed hoisting" function. It can be used to detect if an obstacle has been reached, triggering a sudden (upward) increase or (downward) decrease in the load.
Load variation detection triggers a [Dynamic load fault] fault (dLF). The [Dyn. load Mgt.] (dLb) parameter can be used to configure the response of the drive in the event of this fault.
Load variation detection can also be assigned to a relay or a logic output.

There are two possible detection modes, depending on the configuration of high-speed hoisting:

"Speed reference" mode

[High speed hoisting] (HSO) page 165 = [Speed ref] (SSO).
Torque variation detection.

During high-speed operation, the load is compared to that measured during the speed step. The permissible load variation and its duration can be configured. If exceeded, the drive switches to fault mode.

"Current limitation" mode

[High speed hoisting] (HSO) page 165 = [Current Limit] (CSO).

On ascend, during high-speed operation, an increase in load will result in a drop in speed. Even if high-speed operation has been activated, if the motor frequency drops below the [I Limit Frequency] (SCL) threshold page 165 the drive will switch to fault mode.
On descend, operation takes the form of "speed reference" mode.

Buy: www.ValinOnline.com | Phone 844-385-3099 | Email: CustomerService@valin.com

Code	Name/Description	Adjustment range	Factory setting
dLd-	**[DYNAMIC LOAD DETECT.]** Load variation detection. This can be accessed if [High speed hoisting] (HSO) page 165 is not [No] (nO).		
tLd	❑ **[Dynamic load time]** Activation of load variation detection and adjustment of time delay for taking load variation fault[Dynamic load fault] (dLF) into account. nO ☐ **[No]** (nO): No load variation detection. - ☐ **0.00 s to 10.00 s** : Adjustment of the time delay for taking fault into account.		[No] (nO)
dLd	❑ **[Dynamic load time]** Adjustment of the trip threshold for load variation detection, as a % of rated motor torque.	1 to 100 %	100 %
dLb	❑ **[Dyn. load Mgt.]** Behavior of the drive in the event of a load variation fault. nO ☐ **[Ignore]** (nO): Fault ignored. YES ☐ **[Freewheel]** (YES): Freewheel stop. Stt ☐ **[Per STT]** (Stt): Stop according to configuration of[Type of stop] (Stt) page 134, without tripping fault. In this case the fault relay does not open and the drive is ready to restart as soon as the fault disappears, according to the restart conditions of the active command channel, (e.g. according to [2/3 wire control] (tCC) and [2 wire type] (tCt) page 83 if control is via the terminals). Configuring an alarm for this fault is recommended (assigned to a logic output, for example) in order to indicate the cause of the stop. LFF ☐ **[Fallback spd.]** (LFF): Change to fallback speed, maintained as long as the fault persists and the run command has not been removed (1). rLS ☐ **[Spd maint.]** (rLS): The drive maintains the speed at the time the fault occurred, as long as the fault persists and the run command has not been removed (1). rMP ☐ **[Ramp stop]** (rMP): Stop on ramp. FSt ☐ **[Fast stop]** (FSt): Fast stop.		[Freewheel] (YES)

(1) Because, in this case, the fault does not trigger a stop, it is essential to assign a relay or logic output to its indication.

Buy: www.ValinOnline.com | Phone 844-385-3099 | Email: CustomerService@valin.com

Code	Name/Description	Adjustment range	Factory setting
brP-	**[DB RES. PROTECTION]**		
brO nO YES FLt	**[DB res. protection]** ☐ **[No]** (nO): No braking resistor protection (thereby preventing access to the other function parameters). ☐ **[Alarm]** (YES): Alarm. The alarm may be assigned to a logic output or a relay (see page 97) ☐ **[Fault]** (FLt): Switch to fault (bOF) with locking of drive (freewheel stop). ☞ **Note:** The thermal state of the resistor can be displayed on the graphic display. It is calculated for as long as the drive control remains connected to the power supply.		[No] (nO)
brP ( )	**[DB Resistor Power]** This parameter can be accessed if[DB res. protection] (brO) is not [No] (nO). Rated power of the resistor used.	0.1 kW (0.13 HP) to 1000 kW (1333 HP)	0.1 kW (0.13 HP)
brU ( )	**[DB Resistor value]** This parameter can be accessed if[DB res. protection] (brO) is not [No] (nO). Rated value of the braking resistor in ohms.	0.1 to 200 ohms	0.1 ohms
bUF-	**[BU PROTECTION]** This can be accessed from 55 kW (75 HP) upwards for the MT●●●M3X and from 90 kW (120 HP) upwards for the MT●●●N4.		
bUb nO YES	**[Brake res. fault Mgt]** Management of short-circuit [DB unit sh. circuit] (bUF) and overheating [Internal- th. sensor] (InFb) faultsin the braking unit. ☐ **[Ignore]** (nO): Fault ignored. **Configuration to be used if there is no resistor or braking unit connected to the drive.** ☐ **[Freewheel]** (YES): freewheel stop.		[Freewheel] (YES)
tnF-	**[AUTO TUNING FAULT]**		
tnL nO YES	**[Autotune fault mgt]** ☐ **[Ignore]** (nO): Fault ignored. ☐ **[Freewheel]** (YES): Freewheel stop.		[Freewheel] (YES)

( ) Parameter that can be modified during operation or when stopped.

Buy: www.ValinOnline.com | Phone 844-385-3099 | Email: CustomerService@valin.com

Card pairing

Function can only be accessed in [Expert] mode.

This function is used to detect whenever an option card has been replaced or the software has been modified in any way.
When a pairing password is entered, the parameters of the cards currently inserted are stored. On every subsequent power-up these parameters are verified and, in the event of a discrepancy, the drive locks in HCF fault mode. Before the drive can be restarted you must revert to the original situation or re-enter the pairing password.

The following parameters are verified:

- The type of card for: all cards.
- The software version for: the two control cards, the MT-VW3A3202 extension card and the communication cards.
- The serial number for: the two control cards.

Code	Name/Description	Adjustment range	Factory setting
PPI-	■ [CARDS PAIRING]		
PPI	❑ [Pairing password]	OFF to 9999	[OFF] (OFF)
	The [OFF] (OFF) value signifies that the card pairing function is inactive. The [ON] (On) value signifies that card pairing is active and that an access code must be entered in order to start the drive in the event of a card pairing fault. As soon as the code has been entered the drive is unlocked and the code changes to [ON] (On). - The PPI code is an unlock code (contact factory).		

Buy: www.ValinOnline.com | Phone 844-385-3099 | Email: CustomerService@valin.com

Code	Name/Description		Adjustment range	Factory setting
LFF-	**[FALLBACK SPEED]**			
LFF	**[Fallback speed]** Selection of the fallback speed		0 to 1600 Hz	0 Hz
FSt-	**[RAMP DIVIDER]**			
dCF	**[Ramp divider]** The ramp that is enabled (dEC or dE2) is then divided by this coefficient when stop requests are sent. Value 0 corresponds to a minimum ramp time.	(1)	0 to 10	4
dCI-	**[DC INJECTION]**			
IdC	**[DC inject. level 1]** Level of DC injection braking current activated via logic input or selected as stop mode. **CAUTION** Check that the motor will withstand this current without overheating. **Failure to follow this instruction can result in equipment damage.**	(1) (3)	0.1 to 1.41 In (2)	0.64 In (2)
tdI	**[DC injection time 1]** Maximum current injection time [DC inject. level 1] (IdC). After this time the injection current becomes [DC inject. level 2] (IdC2).	(1) (3)	0.1 to 30 s	0.5 s
IdC2	**[DC inject. level 2]** Injection current activated by logic input or selected as stop mode, once period of time [DC injection time 1] (tdI) has elapsed. **CAUTION** Check that the motor will withstand this current without overheating. **Failure to follow this instruction can result in equipment damage.**	(1) (3)	0.1 In (2) to [DC inject. level 1] (IdC)	0.5 In (2)
tdC	**[DC injection time 2]** Maximum injection time [DC inject. level 2] (IdC2) for injection, selected as stop mode only. (Can be accessed if [Type of stop] (Stt) = [DC injection] (dCI)).	(1) (3)	0.1 to 30 s	0.5 s

(1) The parameter can also be accessed in the [1.3 SETTINGS] (SEt-) and [1.7 APPLICATION FUNCT.] (FUn-) menus.
(2) In corresponds to the rated drive current indicated in the Installation Manual and on the drive nameplate.
(3) Warning: These settings are independent of the [AUTO DC INJECTION] (AdC-) function.

Parameter that can be modified during operation or when stopped.

Buy: www.ValinOnline.com | Phone 844-385-3099 | Email: CustomerService@valin.com

With graphic display keypad:

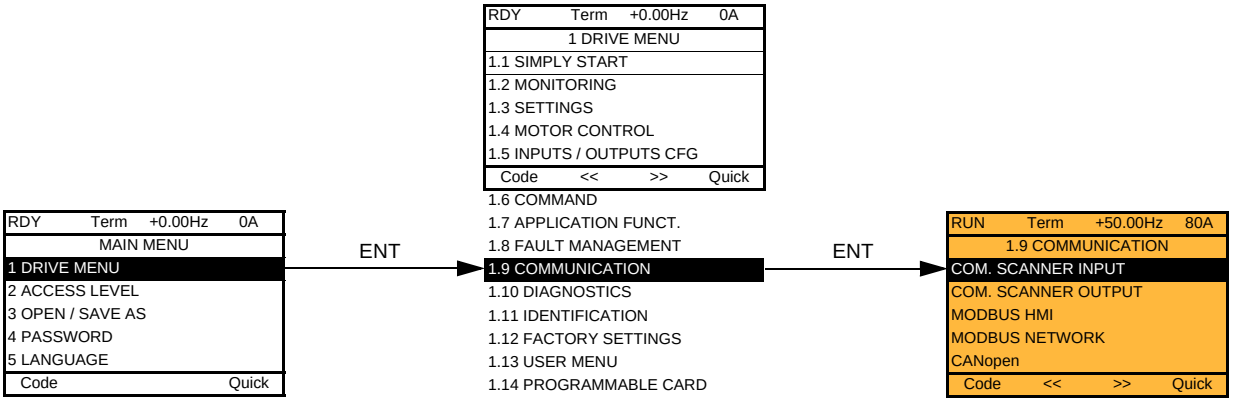

With integrated display keypad:

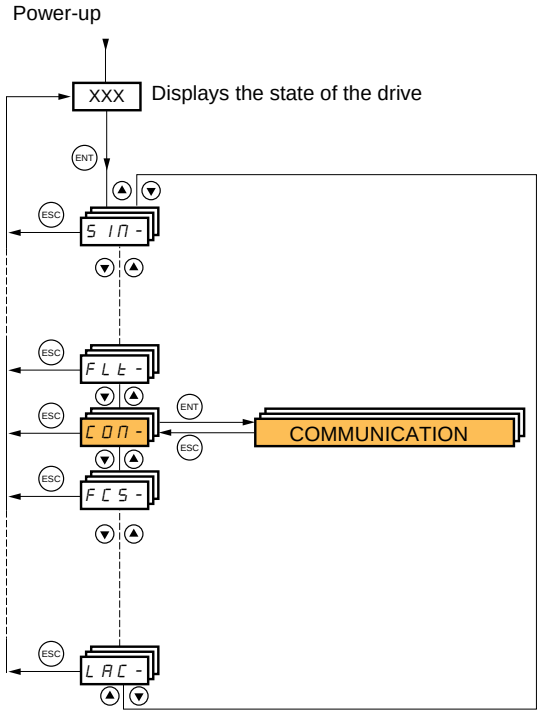

Buy: www.ValinOnline.com | Phone 844-385-3099 | Email: CustomerService@valin.com

Code	Name/Description	Adjustment range	Factory setting
	■ [COM. SCANNER INPUT] **Only accessible via graphic display keypad**		
nMA1	**❑ [Scan. IN1 address]** Address of the 1st input word.		3201
nMA2	**❑ [Scan. IN2 address]** Address of the 2nd input word.		8604
nMA3	**❑ [Scan. IN3 address]** Address of the 3rd input word.		0
nMA4	**❑ [Scan. IN4 address]** Address of the 4th input word.		0
nMA5	**❑ [Scan. IN5 address]** Address of the 5th input word.		0
nMA6	**❑ [Scan. IN6 address]** Address of the 6th input word.		0
nMA7	**❑ [Scan. IN7 address]** Address of the 7th input word.		0
nMA8	**❑ [Scan. IN8 address]** Address of the 8th input word.		0
	■ [COM. SCANNER OUTPUT] **Only accessible via graphic display keypad**		
nCA1	**❑ [Scan.Out1 address]** Address of the 1st output word.		8501
nCA2	**❑ [Scan.Out2 address]** Address of the 2nd output word.		8602
nCA3	**❑ [Scan.Out3 address]** Address of the 3rd output word.		0
nCA4	**❑ [Scan.Out4 address]** Address of the 4th output word.		0
nCA5	**❑ [Scan.Out5 address]** Address of the 5th output word.		0
nCA6	**❑ [Scan.Out6 address]** Address of the 6th output word.		0
nCA7	**❑ [Scan.Out7 address]** Address of the 7th output word.		0
nCA8	**❑ [Scan.Out8 address]** Address of the 8th output word.		0

Buy: www.ValinOnline.com | Phone 844-385-3099 | Email: CustomerService@valin.com

Code	Name/Description	Adjustment range	Factory setting
Md2-	**[MODBUS HMI]** Communication with the graphic display keypad		
tbr2	**[HMI baud rate]** 9.6 or 19.2 kbps via the integrated display. 9600 or 19200 bauds via the graphic display. The graphic display terminal only operates if [HMI baud rate] (tbr2) = 19200 bauds (19.2 kbps). In order for any change in the assignment of [HMI baud rate] (tbr2) to be taken into account you must: - Provide confirmation in a confirmation window if using the graphic display - Press the ENT key for 2 s if using the integrated display		19.2 kbps
tFO2	**[HMI format]** Read-only parameter, cannot be modified.		8E1
Md1-	**[MODBUS NETWORK]**		
Add	**[Modbus Address]** OFF to 247		OFF
AMOA	**[Modbus add Prg C.]** Not applicable		OFF
AMOC	**[Modbus add Com.C.]** Modbus address of the communication card OFF to 247 The parameter can be accessed if a communication card has been inserted and depending on its configuration (please consult the specific documentation).		OFF
tbr	**[Modbus baud rate]** 4.8 - 9.6 - 19.2 - 38.4 kbps on the integrated display. 4800, 9600, 19200 or 38400 bauds on the graphic display.		19.2 kbps
tFO	**[Modbus format]** 8O1 - 8E1 - 8n1, 8n2		8E1
ttO	**[Modbus time out]** 0.1 to 30 s		10.0 s
CnO-	**[CANopen]**		
AdCO	**[CANopen address]** OFF to 127		OFF
bdCO	**[CANopen bit rate]** 50 - 125 - 250 - 500 kbps - 1 Mbps		125 kbps
ErCO	**[Error code]** Read-only parameter, cannot be modified.		

Buy: www.ValinOnline.com | Phone 844-385-3099 | Email: CustomerService@valin.com

Code	Name/Description	Adjustment range	Factory setting
-	**[COMMUNICATION CARD]**		
	See the specific documentation for the card used.		
LCF-	**[FORCED LOCAL]**		
FLO nO LI1 - LI14	**[Forced local assign.]** ☐ **[No]** (nO): Function inactive ☐ **[LI1]** (LI1) to **[LI6]** (LI6) ☐ **[LI7]** (LI7) to **[LI10]** (LI10): If MT-VW3A3201 logic I/O card has been inserted ☐ **[LI11]** (LI11) to **[LI14]** (LI14): If MT-VW3A3202 extended I/O card has been inserted Forced local mode is active when the input is at state 1. [Forced local assign.] (FLO) is forced to [No] (nO) if [Profile] (CHCF) page 119 = [I/O profile] (IO).		[No] (nO)
FLOC nO AI1 AI2 AI3 AI4 LCC PI PG	**[Forced local Ref.]** ☐ **[No]** (nO): Not assigned (control via the terminals with zero reference). ☐ **[AI1]** (AI1): Analog input ☐ **[AI2]** (AI2): Analog input ☐ **[AI3]** (AI3): Analog input, if MT-VW3A3202 extension card has been inserted ☐ **[AI4]** (AI4): Analog input, if MT-VW3A3202 extension card has been inserted ☐ **[HMI]** (LCC): Assignment of the reference and command to the graphic display terminal. Reference: [HMI Frequency ref.] (LFr), page 46, command: RUN/STOP/FWD/REV buttons. ☐ **[RP]** (PI): Frequency input, if MT-VW3A3202 extension card has been inserted ☐ **[Encoder]** (PG): Encoder input, if encoder card has been inserted If the reference is assigned to an analog input, [RP] (PI) or [Encoder] (PG) the command is automatically assigned to the terminals as well (logic inputs)		[No] (nO)
FLOt	**[Time-out forc. local]** 0.1 to 30 s The parameter can be accessed if [Forced local assign.] (FLO) is not [No] (nO). Time delay before communication monitoring is resumed on leaving forced local mode.		10.0 s

Buy: www.ValinOnline.com | Phone 844-385-3099 | Email: CustomerService@valin.com

[1.10 DIAGNOSTICS]

This menu can only be accessed with the graphic display terminal.

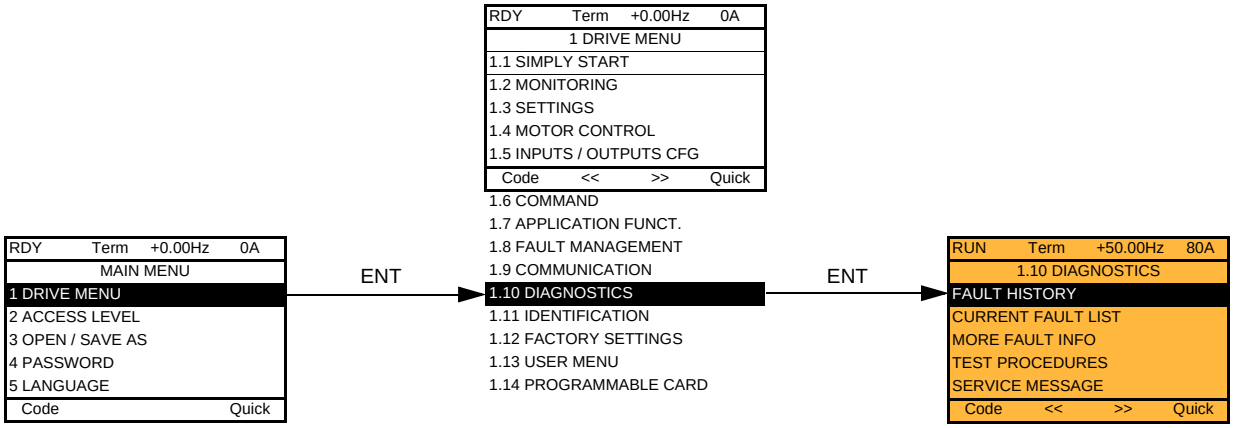

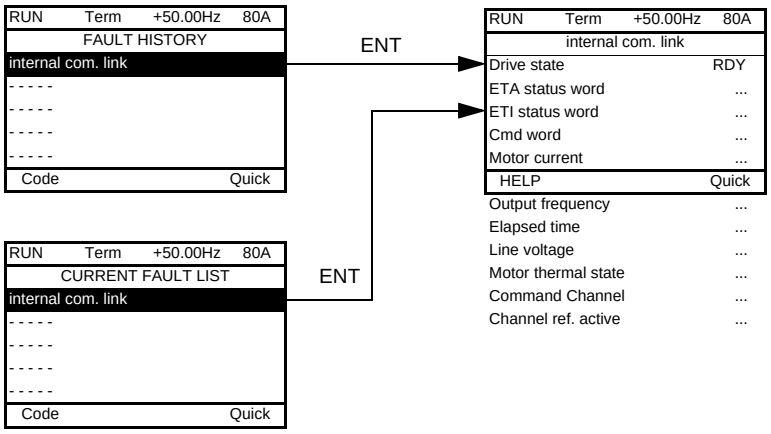

This screen indicates the state of the drive at the moment the selected fault occurred.

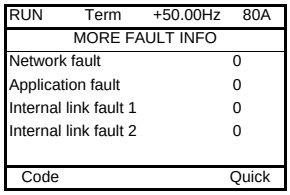

This screen indicates the number of communication faults, for example, with the option cards.
Number: from 0 to 65535

Buy: www.ValinOnline.com | Phone 844-385-3099 | Email: CustomerService@valin.com

[THYRISTORS TEST] is only accessible for MT drive rated above 18.5 kW (25 HP)

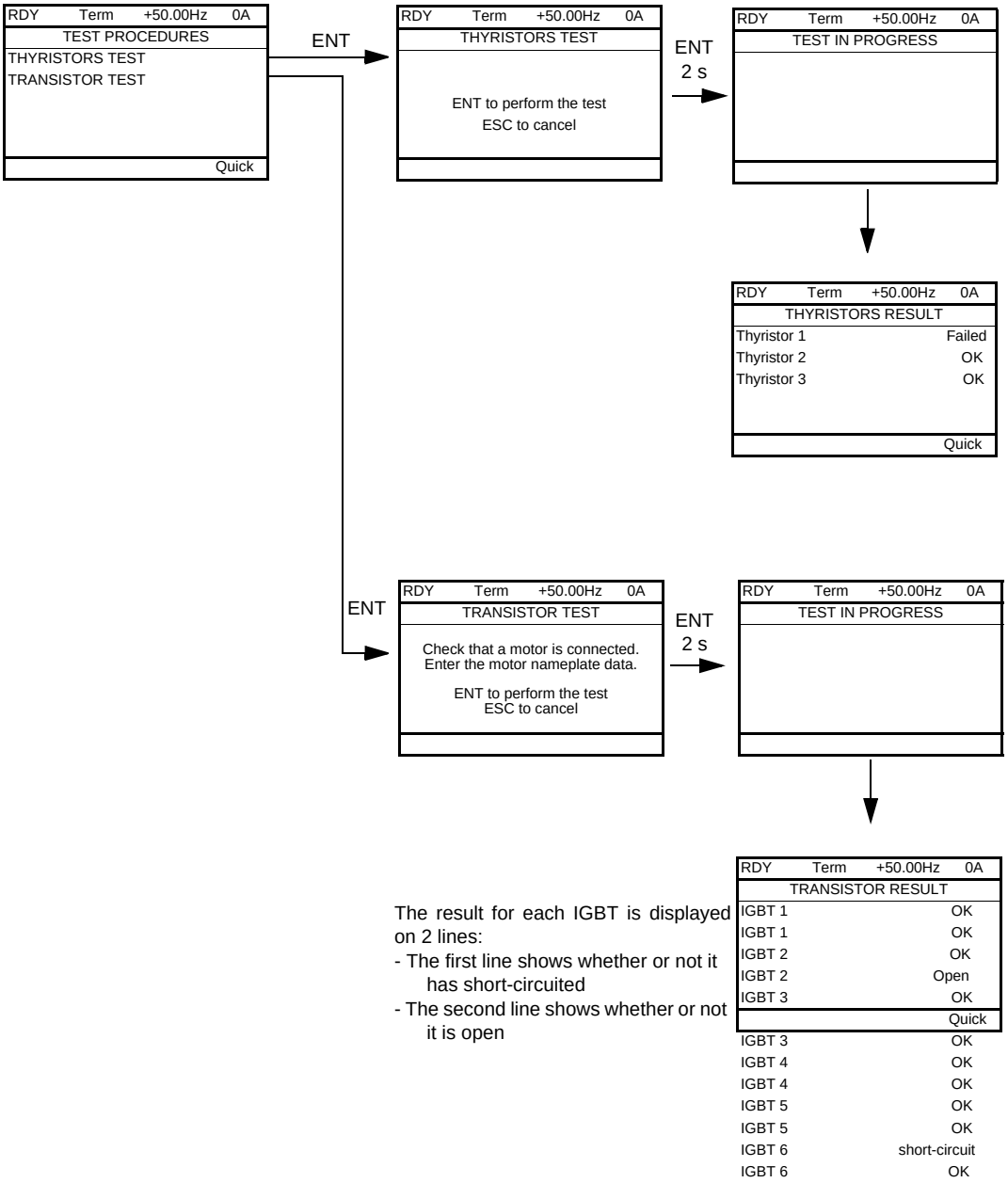

The result for each IGBT is displayed on 2 lines:
- The first line shows whether or not it has short-circuited
- The second line shows whether or not it is open

Note: To start the tests, press and hold down (2 s) the ENT key.

Buy: www.ValinOnline.com | Phone 844-385-3099 | Email: CustomerService@valin.com

[1.11 IDENTIFICATION]

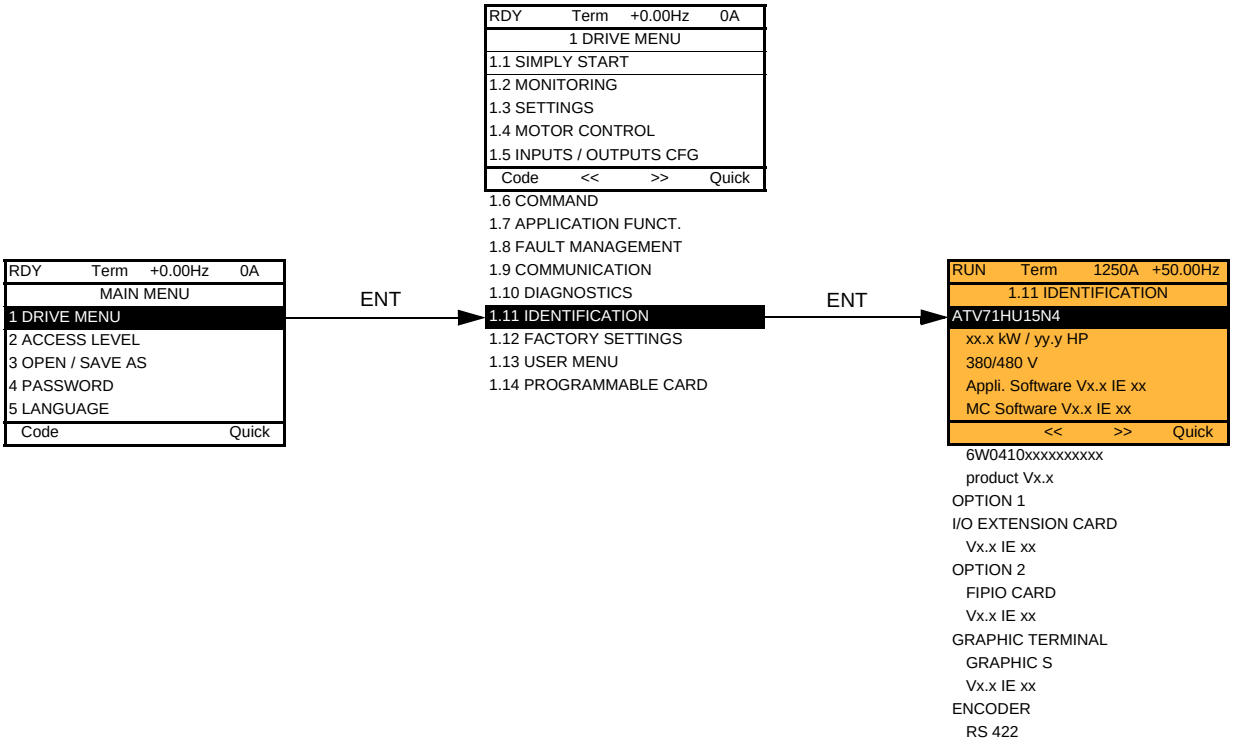

The [1.11 IDENTIFICATION] menu can only be accessed on the graphic display keypad.
This is a read-only menu that cannot be configured. It enables the following information to be displayed:

- Drive reference, power rating and voltage
- Drive software version
- Drive serial number
- Type of options present, with their software version

Buy: www.ValinOnline.com | Phone 844-385-3099 | Email: CustomerService@valin.com

With graphic display keypad:

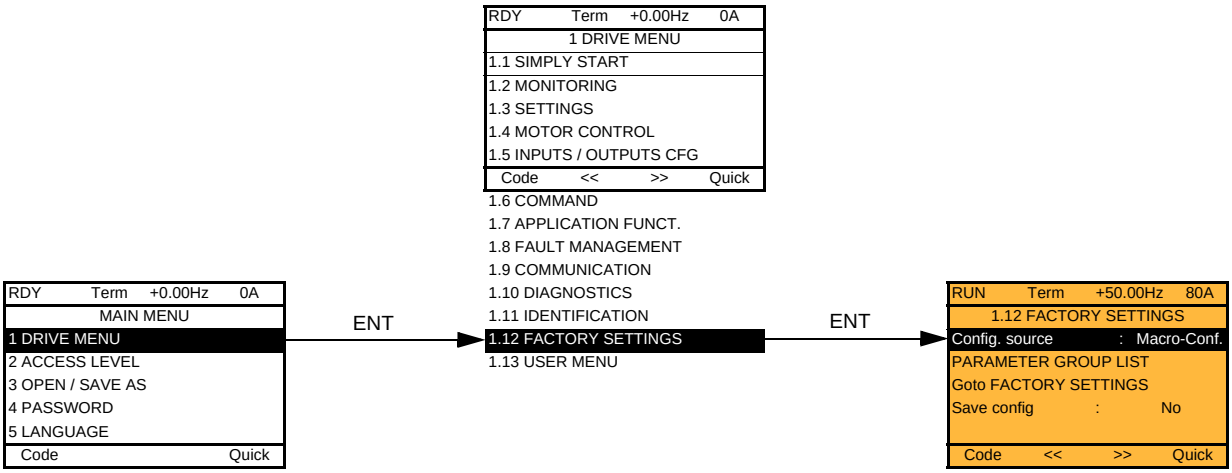

With integrated display keypad:

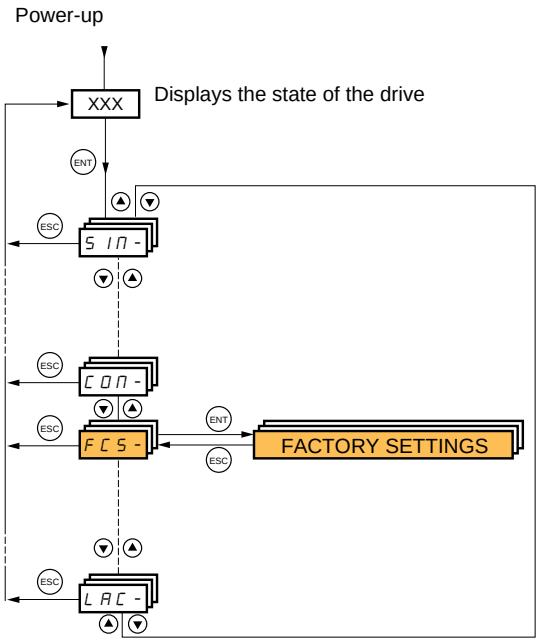

The [1.12 FACTORY SETTINGS] (FCS-) menu is used to:

- Replace the current configuration with the factory configuration or a previously saved configuration.
  All or part of the current configuration can be replaced: select a group of parameters in order to select the menus you wish to load with the selected source configuration.
- Save the current configuration to a file.

Buy: www.ValinOnline.com | Phone 844-385-3099 | Email: CustomerService@valin.com

[1.12 FACTORY SETTINGS] (FCS-)

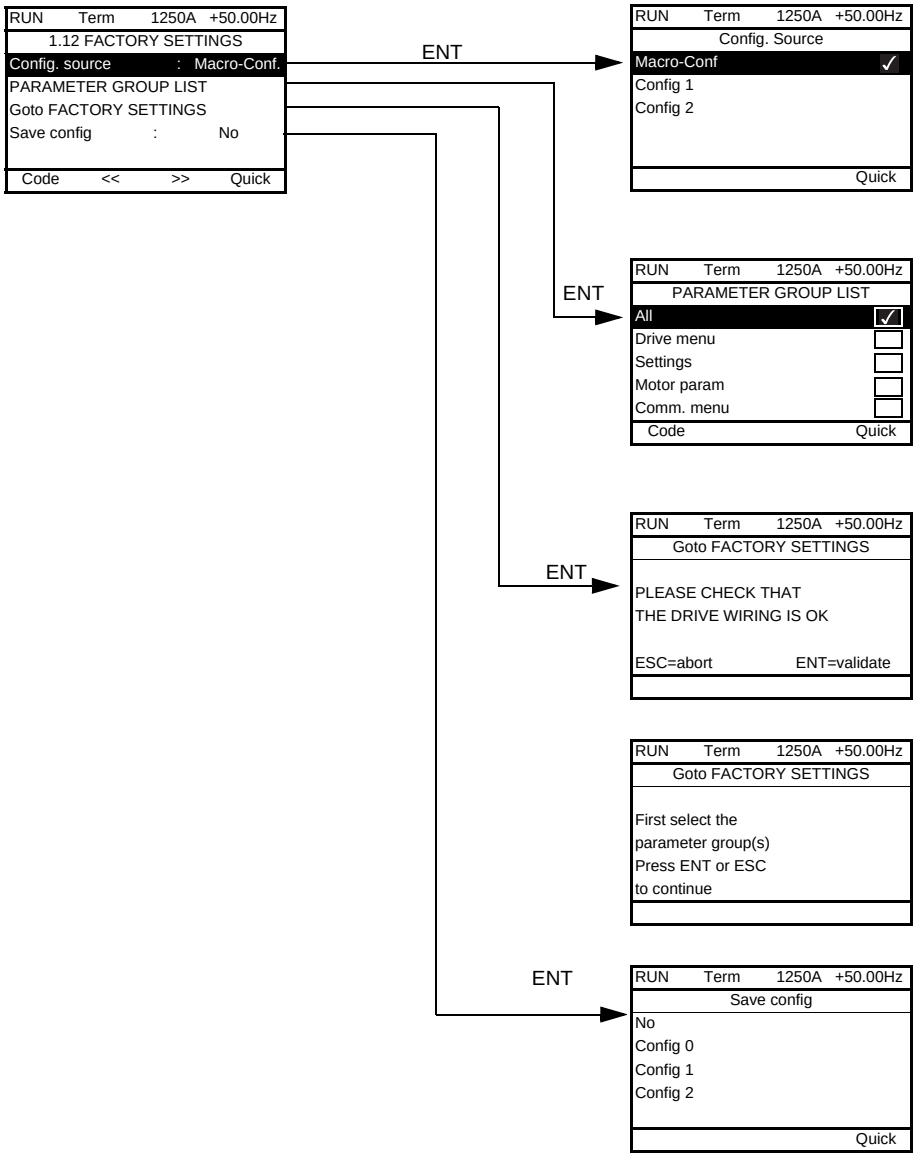

Selection of source configuration

Selection of the menus to be replaced

Note: In factory configuration and after a return to "factory settings", [PARAMETER GROUP LIST] will be empty.

Command to return to "factory settings"

This window appears if no group of parameters is selected.

Buy: www.ValinOnline.com | Phone 844-385-3099 | Email: CustomerService@valin.com

Code	Name/Description
FCSI InI CFG1 CFG2	❑ **[Config. Source]** Choice of source configuration. ☐ **[Macro-Conf]** (InI) Factory configuration, return to selected macro configuration. ☐ **[Config 1]** (CFG1) ☐ **[Config 2]** (CFG2) If the configuration switching function is configured, it will not be possible to access [Config 1] (CFG1) and [Config 2] (CFG2).
FrY- ALL drM SEt MOt COM PLC MOn dIS	❑ **[PARAMETER GROUP LIST]** Selection of menus to be loaded ☐ **[All]** (ALL): All parameters. ☐ **[Drive menu]** (drM): The [1 DRIVE MENU] menu without [1.9 COMMUNICATION] and [1.14 PROGRAMMABLE CARD]. In the[7 DISPLAY CONFIG.]menu, [Return std name] page 251 returns to [No]. ☐ **[Settings]** (SEt): The [1.3 SETTINGS] menu without the [IR compensation] (UFr), [Slip compensation (SLP) and [Mot. therm. current] (ItH) parameters ☐ **[Motor param]** (MOt):motor parameters, see list below. The following selections can only be accessed if [Config. Source] (FCSI) = [Macro-Conf.] (InI): ☐ **[Comm. menu]** (COM): The [1.9 COMMUNICATION] menu without either [Scan. In1 address] (nMA1) to [Scan. In8 address] (nMA8) or [Scan.Out1 address] (nCA1) to [Scan.Out8 address] (nCA8). ☐ **[Prog. card menu]** (PLC): the [1.14 PROGRAMMABLE CARD] menu. ☐ **[Monitor config.]** (MOn): the [6 MONITORING CONFIG.] menu. ☐ **[Display config.]** (dIS): the [7 DISPLAY CONFIG.] menu. See the multiple selection procedure on page 26 for the integrated display terminal and page 17 for the graphic display terminal. ☞ **Note:** In factory configuration and after a return to "factory settings", [PARAMETER GROUP LIST] will be empty.
GFS nO YES	❑ **[Goto FACTORY SETTINGS]** It is only possible to revert to the factory settings if at least one group of parameters has previously been selected. With the integrated display terminal: - No - Yes: The parameter changes back to nO automatically as soon as the operation is complete. With the graphic display terminal: see previous page
SCSI nO Str0 Str1 Str2	❑ **[Save config]** ☐ **[No]** (nO): ☐ **[Config 0]** (Str0): Press and hold down the "ENT" key for 2 s. ☐ **[Config 1]** (Str0): Press and hold down the "ENT" key for 2 s. ☐ **[Config 2]** (Str0): Press and hold down the "ENT" key for 2 s. The active configuration to be saved does not appear for selection. For example, if it is [Config 0] (Str0), only [Config 1] (Str1) and [Config 2] (Str2) appear. The parameter changes back to[No] (nO) as soon as the operation is complete.

List of motor parameters

[1.4 MOTOR CONTROL] (drC-) menu:

[Rated motor power] (nPr) - [Rated motor volt.] (UnS) - [Rated mot current] (nCr) - [Rated motor freq.] (FrS) - [Rated motor speed] (nSP) - [Auto tuning] (tUn) - [Auto tuning status] (tUS) - [U0] (U0) to [U5] (U5) - [F1] (F1) to [F5] (F5) - [V. constant power] (UCP) - [Freq. Const Power] (FCP) - [Nominal I sync] (nCrS) - [Nom motor spdsync] (nSPS) - [Pole pairs.] (PPnS) - [Syn. EMF constant] (PHS) - [Autotune L d-axis] (LdS) - [Autotune L q-axis] (LqS) - [Cust. stator R syn] (rSAS) - [IR compensation] (UFr) - [Slip compensation] (SLP) - motor parameters that can be accessed in[Expert] mode page 70.

[1.3 SETTINGS] (SEt-) menu:

[Mot. therm. current] (ItH)

Example of total return to factory settings

1. [Config. Source] (FCSI) = [Macro-Conf] (InI)
2. [PARAMETER GROUP LIST] (FrY-) = [All] (ALL)
3. [Goto FACTORY SETTINGS] (GFS = YES)

Buy: www.ValinOnline.com | Phone 844-385-3099 | Email: CustomerService@valin.com

[1.13 USER MENU] (USr-)

This menu contains the parameters selected in the [7 DISPLAY CONFIG.] menu on page 250.

Using graphic display keypad:

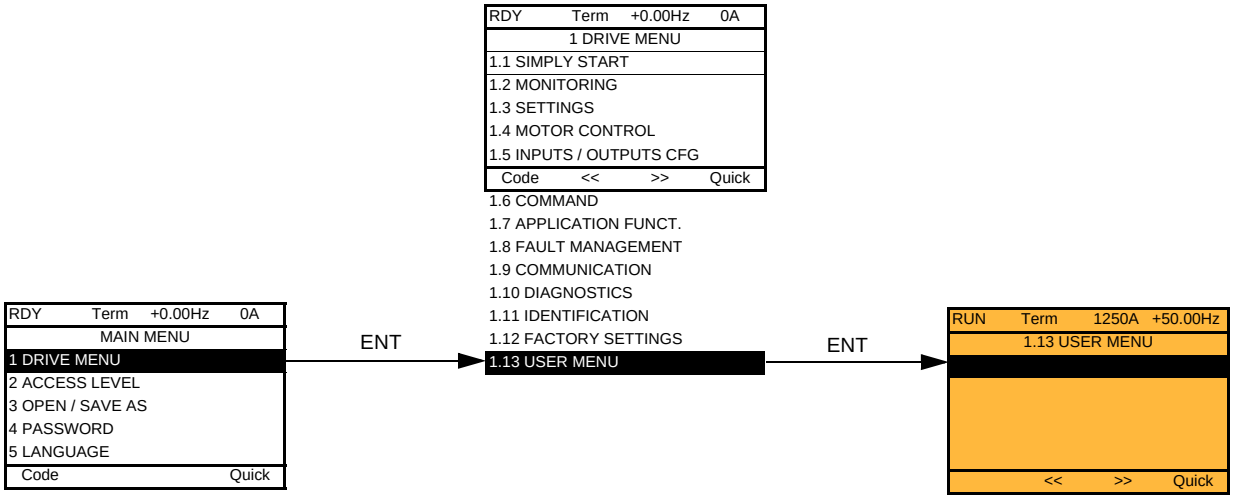

Using integrated display keypad:

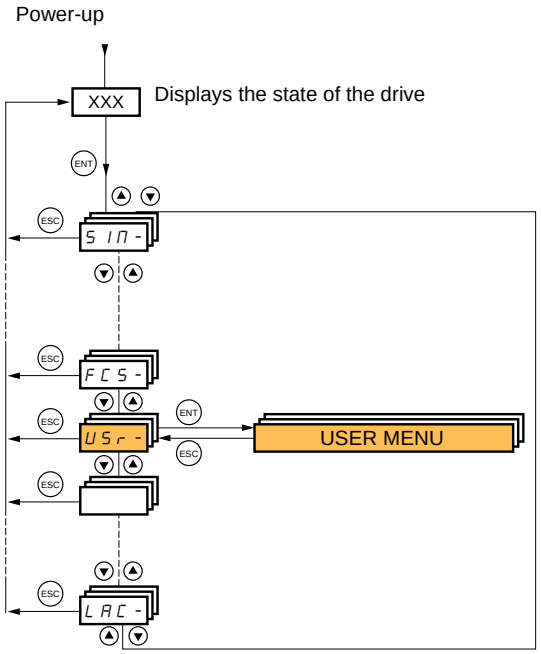

Buy: www.ValinOnline.com | Phone 844-385-3099 | Email: CustomerService@valin.com

[3. OPEN/SAVE AS]

This menu can only be accessed with the graphic display keypad.

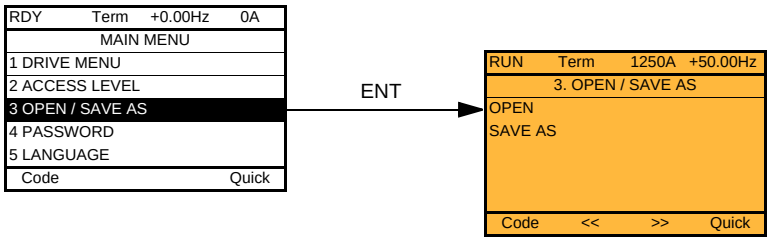

[Open]: To download one of the 4 files from the graphic display to the drive.
[SAVE AS]: To download the current drive configuration to the graphic display.

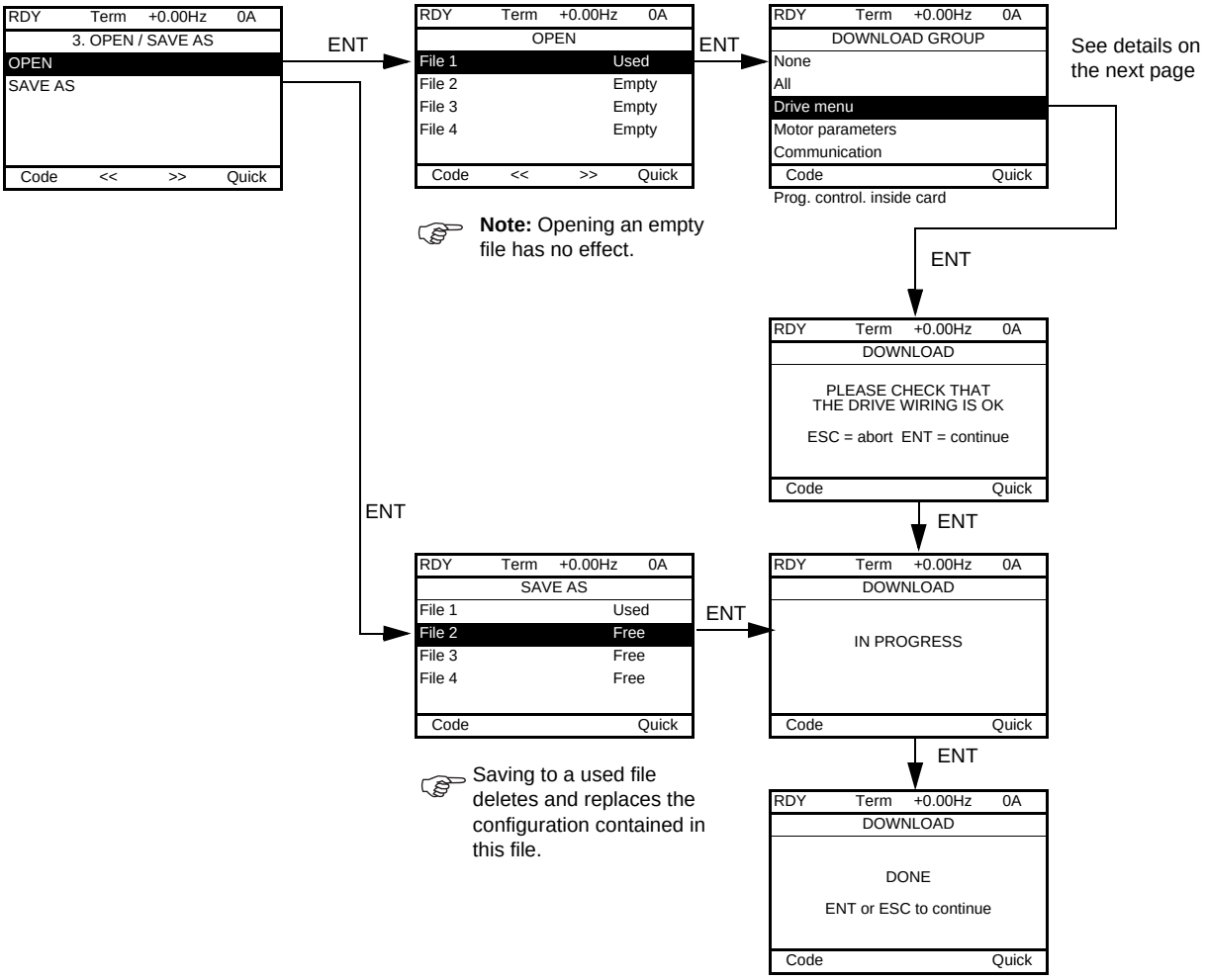

Various messages may appear when the download is requested:

- [IN PROGRESS]
- [DONE]
- Error messages if download not possible
- [Motor parameters are NOT COMPATIBLE. Do you want to continue?]: In this case the download is possible, but the parameters will be restricted.

Buy: www.ValinOnline.com | Phone 844-385-3099 | Email: CustomerService@valin.com

[DOWNLOAD GROUP]

[None] :		No parameters
[All]:		All parameters in all menus
[Drive menu] :		The entire [1 DRIVE MENU]
[Motor parameters]:	[Rated motor power] (nPr)	in the [1.4 MOTOR CONTROL] (drC-) menu
	[Rated motor volt.] (UnS)	
	[Rated mot. current] (nCr)	
	[Rated motor freq.] (FrS)	
	[Rated motor speed] (nSP)	
	[Auto tuning] (tUn)	
	[Auto tuning status] (tUS)	
	[U0] (U0) to [U5] (U5)	
	[F1] (F1) to [F5] (F5)	
	[V. constant power] (UCP)	
	[Freq. Const Power] (FCP)	
	[Nominal I sync.] (nCrS)	
	[Nom motor spdsync] (nSPS)	
	[Pole pairs] (PPnS)	
	[Syn. EMF constant] (PHS)	
	[Autotune L d-axis] (LdS)	
	[Autotune L q-axis] (LqS)	
	[Cust. stator R syn] (rSAS)	
	[IR compensation] (UFr)	
	[Slip compensation] (SLP)	
	The motor parameters that can be accessed in [Expert] mode, page 70	
	[Mot. therm. current] (ItH)	in the [1.3 SETTINGS] (SEt-) menu
[Communication] :		All the parameters in the [1.9 COMMUNICATION] menu
[Prog. control. inside card] :		Not applicable

Buy: www.ValinOnline.com | Phone 844-385-3099 | Email: CustomerService@valin.com

[4. PASSWORD] (COd-)

With graphic display keypad:

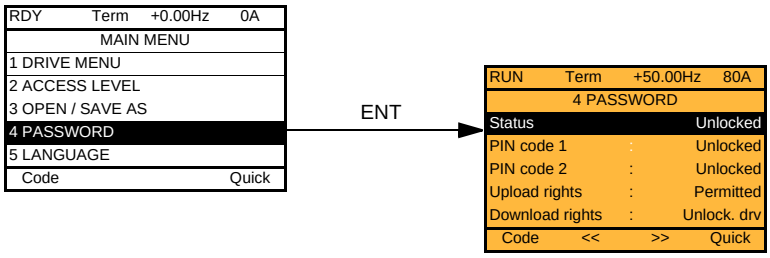

With integrated display keypad:

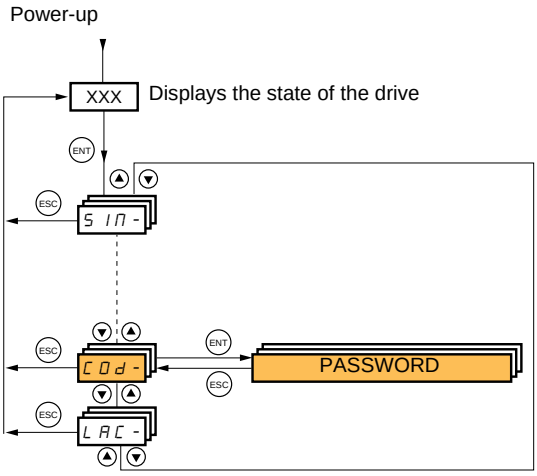

Enables the configuration to be protected with an access code or a password to be entered in order to access a protected configuration.

Example with graphic display keypad:

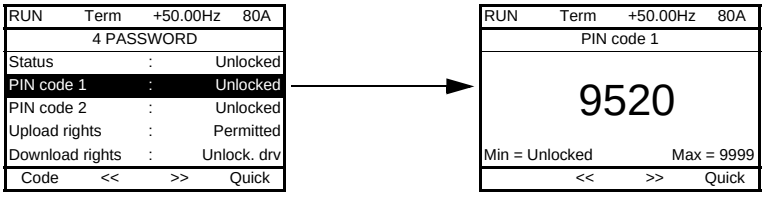

- The drive is unlocked when the PIN codes are set to [unlocked] (OFF) (no password) or when the correct code has been entered.
- Before protecting the configuration with an access code, you must:
  - Define the [Upload rights] (ULr) and [Download rights] (dLr).
  - Make a careful note of the code and keep it in a safe place where you will always be able to find it.
- The drive has 2 access codes, enabling 2 access levels to be set up.
  - PIN code 1 is a public unlock code: 6969.
  - PIN code 2 is an unlock code known only to the factory. It can only be accessed in [Expert] mode.
  - Only one PIN1 or PIN2 code can be used - the other must remain set to [OFF] (OFF).

Note: When the unlock code is entered, the user access code appears.

The following items are access-protected:
- Return to factory settings ([1.12 FACTORY SETTINGS] (FCS-) menu.
- The channels and parameters protected by the [1.13 USER MENU] as well as the menu itself.
- The custom display settings ([7 DISPLAY CONFIG.] menu).

Buy: www.ValinOnline.com | Phone 844-385-3099 | Email: CustomerService@valin.com

Code	Name/Description	Adjustment range	Factory setting
CSt	❑ **[Status]** Information parameter, cannot be modified. LC ☐ **[Locked]** (LC): The drive is locked by a password. ULC ☐ **[Unlocked]** (ULC): The drive is not locked by a password.		[Unlocked] (ULC)
COd	❑ **[PIN code 1]** 1st access code. The value [OFF] (OFF) indicates that no password has been set [Unlocked]. The value [ON] (On) indicates that the drive is protected and an access code must be entered in order to unlock it. Once the correct code has been entered, it remains on the display and the drive is unlocked until the next time the power supply is disconnected. - PIN code 1 is a public unlock code: 6969.	OFF to 9999	[OFF] (OFF)
COd2	❑ **[PIN code 2]** Parameter can only be accessed in [Expert] mode. 2nd access code. The value [OFF] (OFF) indicates that no password has been set [Unlocked]. The value [ON] (On) indicates that the drive is protected and an access code must be entered in order to unlock it. Once the correct code has been entered, it remains on the display and the drive is unlocked until the next time the power supply is disconnected. - PIN code 2 is an unlock code known only to Motortronics Product Support.	OFF to 9999	[OFF] (OFF)
ULr	❑ **[Upload rights]** Read or copy the current configuration to the drive. ULr0 ☐ **[Permitted]** (ULr0): The current drive configuration can always be uploaded to the graphic display keypad or PowerSuite. ULr1 ☐ **[Not allowed]** (ULr1): The current drive configuration can only be uploaded to the graphic display keypad ☐ or PowerSuite if the drive is not protected by an access code or if the correct code has been entered.		[Permitted] (ULr0)
dLr	❑ **[Download rights]** Writes the current configuration to the drive or downloads a configuration to the drive dLr0 ☐ **[Locked drv]** (dLr0): A configuration file can only be downloaded to the drive if the drive is protected by an access code, which is the same as the access code for the configuration to be downloaded. dLr1 ☐ **[Unlock. drv]** (dLr1): A configuration file can be downloaded to the drive or a configuration in the drive can be modified if the drive is unlocked (access code entered) or is not protected by an access code. dLr2 ☐ **[Not allowed]** (dLr2): Download not authorized. dLr3 ☐ **[Lock/unlock]** (dLr3): Combination of [Locked drv.] (dLr0) and [Unlock. drv] (dLr1).		[Unlock. drv] (dLr1)

Buy: www.ValinOnline.com | Phone 844-385-3099 | Email: CustomerService@valin.com

[6 MONITORING CONFIG.]

This menu can only be accessed with the graphic display keypad.

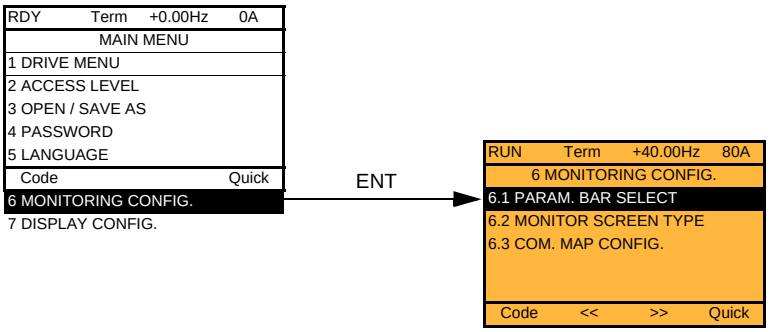

This can be used to configure the information displayed on the graphic display screen during operation.

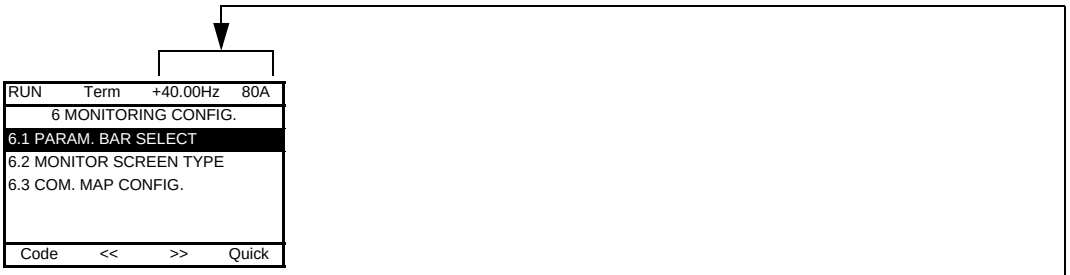

[6.1. PARAM. BAR SELECT]: Selection of 1 to 2 parameters displayed on the top line (the first 2 cannot be modified).

[6.2. MONITOR SCREEN TYPE]: Selection of parameters displayed in the centre of the screen and the display mode (digital values or bar graph format).

[6.3. COM. MAP CONFIG.]: Selection of the words displayed and their format.

Buy: www.ValinOnline.com | Phone 844-385-3099 | Email: CustomerService@valin.com

Name/Description

[6.1 PARAM. BAR SELECT]

☐ [Alarm groups]	
☐ [Frequency ref.]	in Hz: parameter displayed in factory configuration.
☐ [Torque reference]	as a %
☐ [Output frequency]	in Hz
☐ [Motor current]	in A: parameter displayed in factory configuration.
☐ [ENA avg speed]	in Hz
☐ [Motor speed]	in rpm
☐ [Motor voltage]	in V
☐ [Motor power]	in W
☐ [Motor torque]	as a %
☐ [Mains voltage]	in V
☐ [Motor thermal state]	as a %
☐ [Drv. thermal state]	as a %
☐ [DBR thermal state]	as a %
☐ [Consumption]	in Wh or kWh depending on drive rating
☐ [Run time]	in hours (length of time the motor has been switched on)
☐ [Power on time]	in hours (length of time the drive has been switched on)
☐ [IGBT alarm counter]	in seconds (total time of IGBT overheating alarms)
☐ [PID reference]	as a %
☐ [PID feedback]	as a %
☐ [PID error]	as a %
☐ [PID Output]	in Hz
☐ [- - - - 02]	Not applicable
to	
☐ [- - - - 06]	Not applicable
☐ [Config. active]	CNFO, 1 or 2 (see page 194)
☐ [Utilised param. set]	SET1, 2 or 3 (see page 192)

Select the parameter using ENT (a ☑ then appears next to the parameter). Parameter(s) can also be deselected using ENT. 1 or 2 parameters can be selected.

Example:

PARAM. BAR SELECT	
MONITORING	
---------	☑
---------	☐
---------	☐
---------	☑

Buy: www.ValinOnline.com | Phone 844-385-3099 | Email: CustomerService@valin.com

Name/Description

■ [6.2. MONITOR SCREEN TYPE]

❑ [Display value type]

- ☐ **[Digital]**: Display of one or two digital values on the screen (factory configuration).
- ☐ **[Bar graph]**: Display of one or two bar graphs on the screen.
- ☐ **[List]**: Display a list of between one and five values on the screen.

❑ [PARAMETER SELECTION]

☐ **[Alarm groups]**	can only be accessed if [Display value type] = [List]
☐ **[Frequency ref.]**	in Hz: parameter displayed in factory configuration.
☐ **[Torque reference]**	as a %
☐ **[Output frequency]**	in Hz
☐ **[Motor current]**	in A
☐ **[ENA avg speed]**	in Hz
☐ **[Motor speed]**	in rpm
☐ **[Motor voltage]**	in V
☐ **[Motor power]**	in W
☐ **[Motor torque]**	as a %
☐ **[Mains voltage]**	in V
☐ **[Motor thermal state]**	as a %
☐ **[Drv. thermal state]**	as a %
☐ **[DBR thermal state]**	as a %
☐ **[Consumption]**	in Wh or kWh depending on drive rating
☐ **[Run time]**	in hours (length of time the motor has been switched on)
☐ **[Power on time]**	in hours (length of time the drive has been switched on)
☐ **[IGBT alarm counter]**	in seconds (total time of IGBT overheating alarms)
☐ **[PID reference]**	as a %
☐ **[PID feedback]**	as a %
☐ **[PID error]**	as a %
☐ **[PID Output]**	in Hz
☐ **[- - - - 02]**	Not applicable
to	
☐ **[- - - - 06]**	Not applicab le
☐ **[Config. active]**	CNFO, 1 or 2 (see page 194), can only be accessed if [Display value type] = [List]
☐ **[Utilised param. set]**	SET1, 2 or 3 (see page 192), can only be accessed if [Display value type] = [List]

Select the parameter(s) using ENT (a ☑ then appears next to the parameter). Parameter(s) can also be deselected using ENT.

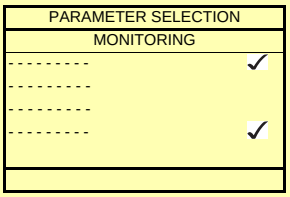

Examples include:

Display of 2 digital values

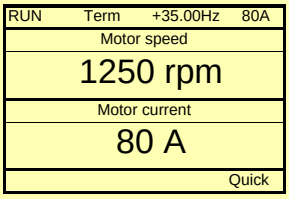

Display of 2 bar graphs

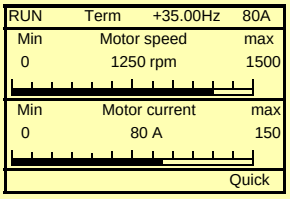

Display of a list of 5 values

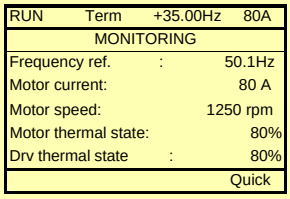

Buy: www.ValinOnline.com | Phone 844-385-3099 | Email: CustomerService@valin.com

Name/Description

[6.3. COM. MAP CONFIG.]

[Word 1 add. select.]

Select the address of the word to be displayed by pressing the <<, >> (F2 and F3) keys and rotating the navigation button.

[Format word 1]

Format of word 1.

- **[Hex]**: Hexadecimal
- **[Signed]** : Decimal with sign
- **[Unsigned]** : Decimal without sign

[Word 2 add. select.]

Select the address of the word to be displayed by pressing the <<, >> (F2 and F3) keys and rotating the navigation button.

[Format word 2]

Format of word 2.

- **[Hex]**: Hexadecimal
- **[Signed]** : Decimal with sign
- **[Unsigned]** : Decimal without sign

[Word 3 add. select.]

Select the address of the word to be displayed by pressing the <<, >> (F2 and F3) keys and rotating the navigation button.

[Format word 3]

Format of word 3.

- **[Hex]**: Hexadecimal
- **[Signed]** : Decimal with sign
- **[Unsigned]** : Decimal without sign

[Word 4 add. select.]

Select the address of the word to be displayed by pressing the <<, >> (F2 and F3) keys and rotating the navigation button.

[Format word 4]

Format of word 4.

- **[Hex]**: Hexadecimal
- **[Signed]** : Decimal with sign
- **[Unsigned]** : Decimal without sign

It will then be possible to view the selected words in the [COMMUNICATION MAP] submenu of the [1.2 MONITORING] menu.
Example:

```
RUN        Term      +35.00Hz    80A
        COMMUNICATION MAP
- - - - - - - - - - -
- - - - - - - - - - -
W3141:          F230 Hex

                <<        >>       Quick
```


Buy: www.ValinOnline.com | Phone 844-385-3099 | Email: CustomerService@valin.com

[7 DISPLAY CONFIG.]

This menu can only be accessed with the graphic display keypad. It can be used to customize parameters or a menu and to access parameters.

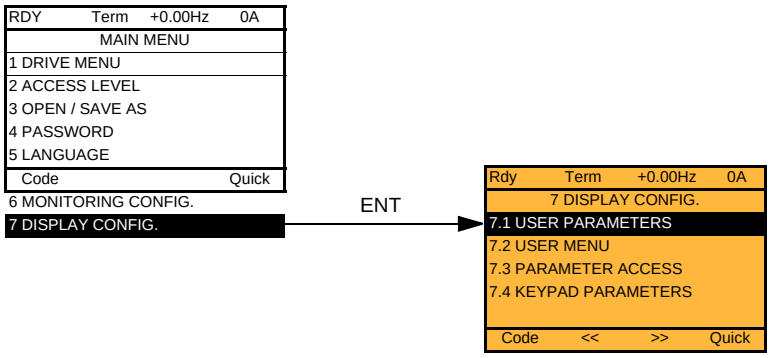

7.1: USER PARAMETERS: Customization of 1 to 15 parameters.

7.2 USER MENU: Creation of a customized menu.

7.3 PARAMETER ACCESS: Customization of the visibility and protection mechanisms of menus and parameters.

7.4 KEYPAD PARAMETERS: Adjustment of the contrast and stand-by mode of the graphic display keypad (parameters stored in the keypad rather than in the drive).

Buy: www.ValinOnline.com | Phone 844-385-3099 | Email: CustomerService@valin.com

If [Return std name] = [Yes] the display reverts to standard but the custom settings remain stored.

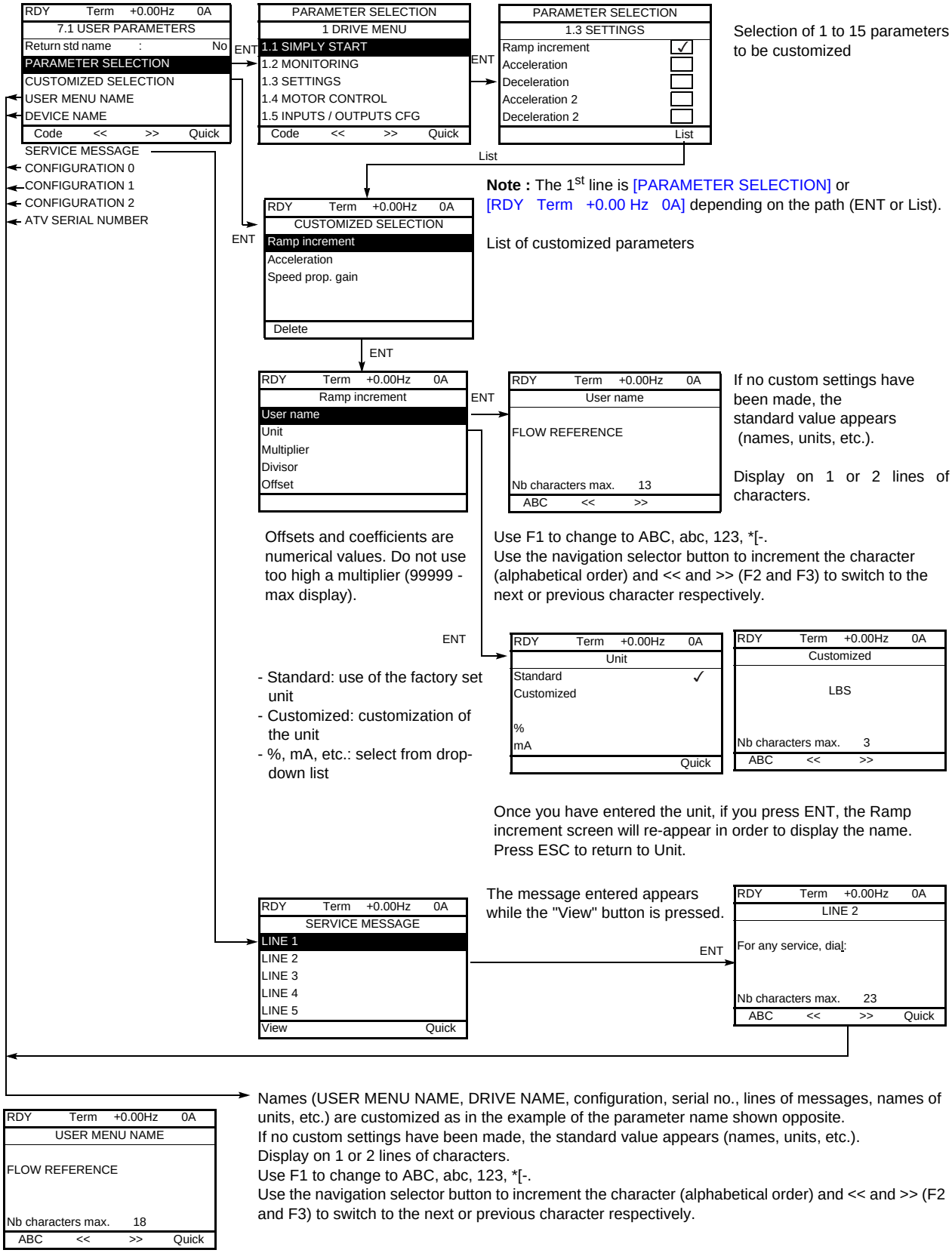

Buy: www.ValinOnline.com | Phone 844-385-3099 | Email: CustomerService@valin.com

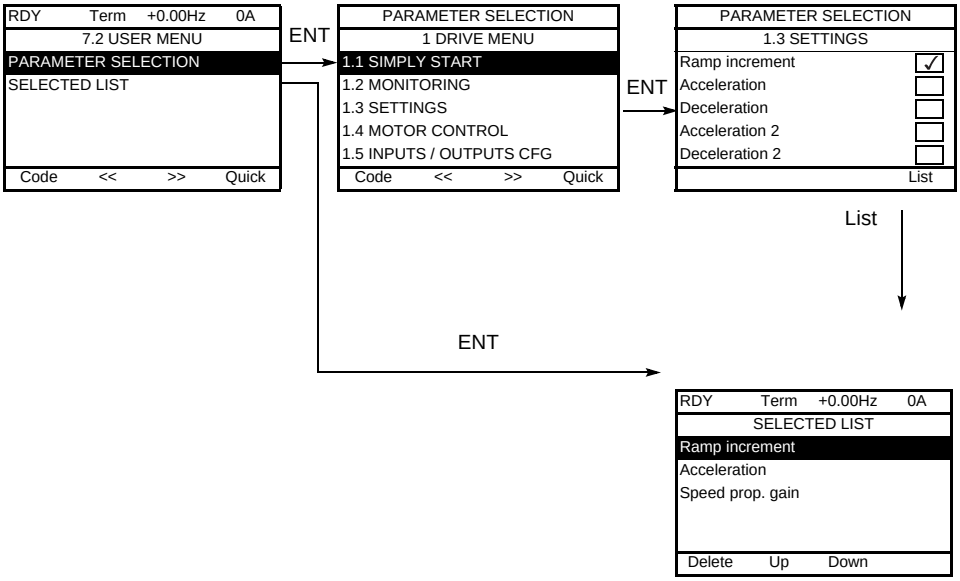

Selection of parameters included in the user menu

Note: The 1st line is [PARAMETER SELECTION] or [RDY Term +0.00 Hz 0A] depending on the path (ENT or List).

Parameter list making up the user menu.

Use the F2 and F3 keys to arrange the parameters in the list (example below using F3).

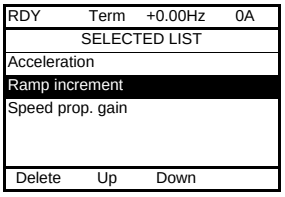

Buy: www.ValinOnline.com | Phone 844-385-3099 | Email: CustomerService@valin.com

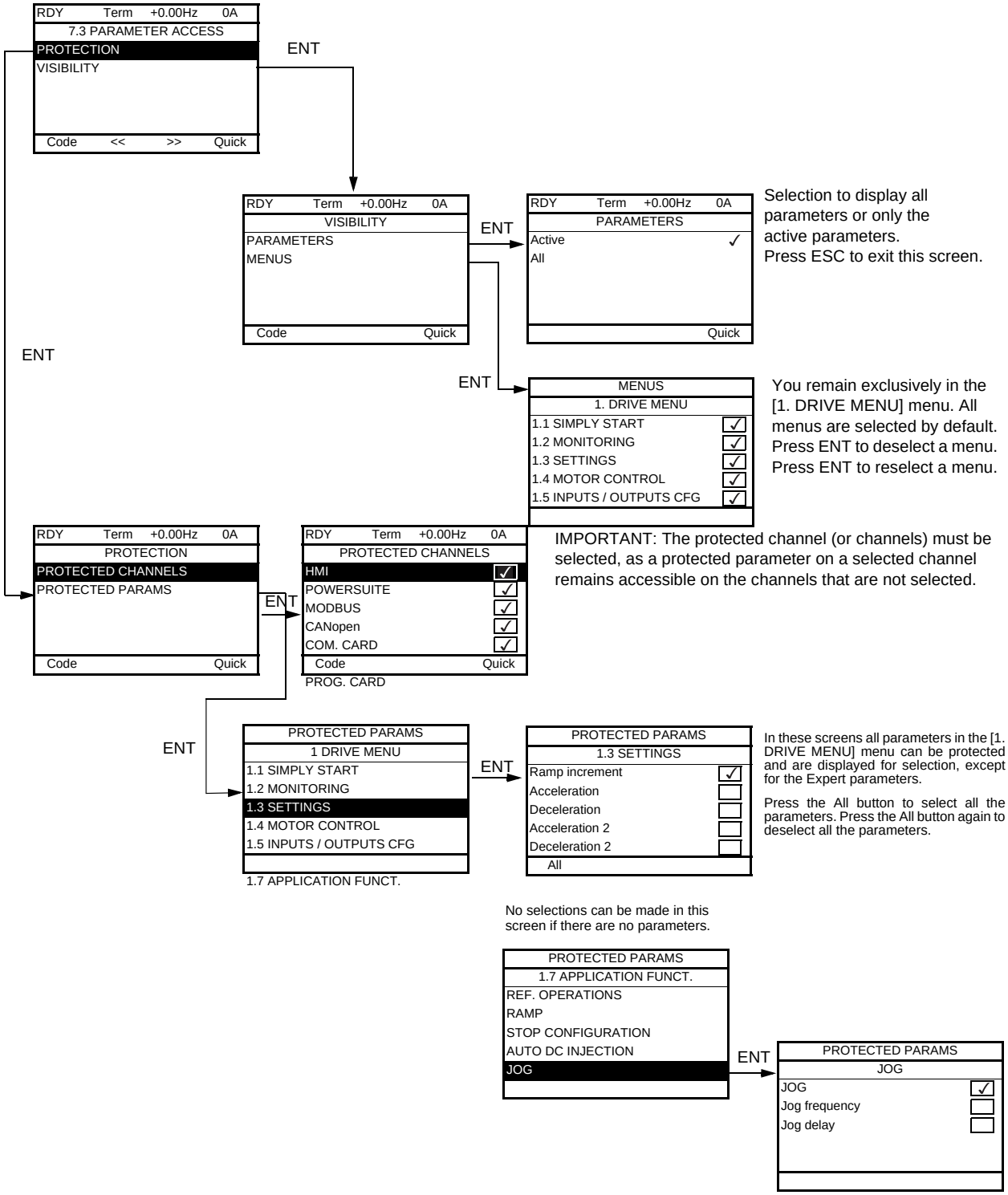

Note: The protected parameters are no longer accessible and are not, therefore, displayed for the selected channels.

Buy: www.ValinOnline.com | Phone 844-385-3099 | Email: CustomerService@valin.com

RDY	Term	+0.00Hz	0A
7.4 KEYPAD PARAMETERS			
Contrast			
Keypad stand-by			
Code	<<	>>	Quick

Name/Description	Adjustment range	Factory setting
❑ **[Keypad contrast]** Adjustment of contrast on graphic display unit.	0 to 100 %	50 %
❑ **[Keypad stand-by]** Configures and adjusts the stand-by mode of the graphic display unit. ☐ **[No]**: No stand-by mode. ☐ **[1]** to **[10]**: Adjusts the time during which the keypad is to remain idle before stand-by mode is triggered, in minutes. After this idle time, the display backlight turns off and the contrast is reduced. The screen returns to normal operation when a key or the navigation button is pressed. It also returns to normal operation if the keypad exits the normal display mode, for example, if a fault occurs.		[5]

Buy: www.ValinOnline.com | Phone 844-385-3099 | Email: CustomerService@valin.com

[MULTIPOINT SCREEN]

Communication is possible between a graphic display keypad and a number of drives connected on the same bus. The addresses of the drives must be configured in advance in the [1.9 COMMUNICATION] menu using the [Modbus Address] (Add) parameter, page 233.

When a number of drives are connected to the same display keypad, the terminal automatically displays the following screens:

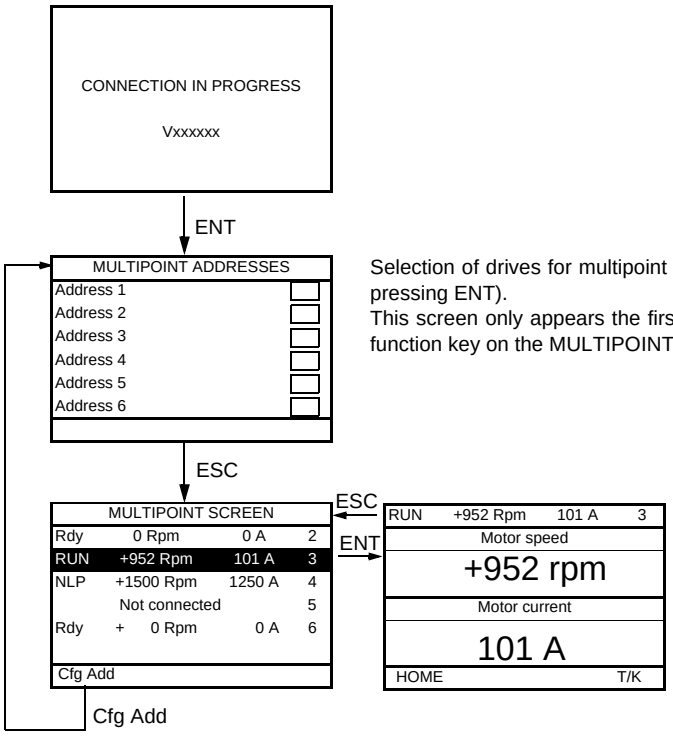

Selection of drives for multipoint dialog (select each address and check the box by pressing ENT).
This screen only appears the first time the drive is powered up, or if the "Cfg Add" function key on the MULTIPOINT SCREEN is pressed (see below).

Selection of a drive for multipoint dialog

In multipoint mode, the command channel is not displayed. From left to right, the state, then the 2 selected parameters and finally the drive address appear.

All menus can be accessed in multipoint mode. Only drive control via the graphic display keypad is not authorized, apart from the Stop key, which locks all the drives.
If there is a fault on a drive, this drive is displayed.

Buy: www.ValinOnline.com | Phone 844-385-3099 | Email: CustomerService@valin.com

Servicing

The MT Series does not require any preventive maintenance. It is nevertheless advisable to perform the following regularly:

- Check the condition and tightness of the connections.
- Ensure that the temperature around the unit remains at an acceptable level and that ventilation is effective (average service life of fans: 3 to 5 years, depending on the operating conditions).
- Remove any dust from the drive.

Assistance with maintenance, fault display

If a problem arises during setup or operation, first check that the recommendations relating to the environment, mounting and connections have been observed.

The first fault detected is saved and displayed, and the drive locks up (trips or faults).
The drive switching to fault mode can be indicated remotely via a logic output or a relay, which can be configured in the [1.5 INPUTS / OUTPUTS CFG] (I-O-) menu, see, for example, [R1 CONFIGURATION] (r1-) page 97.

Menu [1.10 DIAGNOSTICS]

This menu can only be accessed with the graphic display keypad. It displays faults and their cause in plain text and can be used to carry out tests, see page 235.

Clearing the fault

Disconnect the drive power supply in the event of a non-resettable fault.
Wait for the display to disappear completely.
Find the cause of the fault in order to correct it.

The drive is unlocked after a fault:

- By switching off the drive until the display disappears completely, then switching on again
- Automatically in the scenarios described for the[AUTOMATIC RESTART] (Atr-) function, page 211
- By means of a logic input or control bit assigned to the [FAULT RESET] (rSt-) function, page 210
- By pressing the STOP/RESET button on the graphic display keypad

Menu [1.2 MONITORING] (SUP-):

This is used to prevent and find the causes of faults by displaying the drive state and its current values.
It can be accessed with the integrated display keypad.

Spares and repairs:

Consult Motortronics for product support.

Buy: www.ValinOnline.com | Phone 844-385-3099 | Email: CustomerService@valin.com

Drive does not start, no fault displayed

- If the display does not light up, check the power supply to the drive.
- The assignment of the "Fast stop" or "Freewheel" functions will prevent the drive starting if the corresponding logic inputs are not powered up. The MT Series then displays [Freewheel] (nSt) in freewheel stop and [Fast stop] (FSt) in fast stop. This is normal since these functions are active at zero so that the drive will be stopped safely if there is a loose wire.
- Make sure that the run command input or inputs are activated in accordance with the selected control mode ([2/3 wire control] (tCC) and [2 wire type] (tCt) parameters, page 83).
- If an input is assigned to the limit switch function and this input is at zero, the drive can only be started up by sending a command for the opposite direction (see pages 148 and 186).
- If the reference channel or command channel is assigned to a communication bus, when the power supply is connected, the drive will display [Freewheel] (nSt) and remain in stop mode until the communication bus sends a command.

Fault which cannot be reset automatically

The cause of the fault must be removed before resetting by turning the drive off and then back on.
AnF, brF, ECF, EnF, SOF, SPF and tnF faults can also be reset remotely by means of a logic input or control bit ([Fault reset] (rSF) parameter, page 210).
AnF, EnF, InFA, InFb, SOF, SPF, and tnF faults can be inhibited and cleared remotely by means of a logic input or control bit ([Fault inhibit assign.] (InH) parameter, page 221).

Fault	Name	Probable cause	Remedy
AI2F	[AI2 input]	• Non-conforming signal on analog input AI2	• Check the wiring of analog input AI2 and the value of the signal.
AnF	[Load slipping]	• The encoder speed feedback does not match the reference	• Check the motor, gain and stability parameters. • Add a braking resistor. • Check the size of the motor/drive/load. • Check the encoder's mechanical coupling and its wiring.
bOF	[DBR overload]	• The braking resistor is under excessive stress	• Check the size of the resistor and wait for it to cool down • Check the [DB Resistor Power] (brP) and [DB Resistor value] (brU) parameters, page 228.
brF	[Brake feedback]	• The brake feedback contact does not match the brake logic control • The brake does not stop the motor quickly enough (detected by measuring the speed on the "Pulse input" input).	• Check the feedback circuit and the brake logic control circuit • Check the mechanical state of the brake • Check the brake linings
bUF	[DB unit sh. Circuit]	• Short-circuit output from braking unit • Braking unit not connected	• Check the wiring of the braking unit and the resistor. • Check the braking resistor • The monitoring of this fault must be disabled by the [Brake res. fault Mgt.] (bUb) parameter, page 228 if there is no resistor or braking unit connected to the drive, at and above 55 kW (75 HP) at 230 and at and above 90 kW (125 HP) at 460V.
CrF1	[Precharge]	• Charging relay control fault or charging resistor damaged	• Turn the drive off and then back on again • Check the internal connections • Inspect/repair the drive
CrF2	[Thyr. soft charge]	• DC bus charging fault (thyristors)	
ECF	[Encoder coupling]	• Break in encoder's mechanical coupling	• Check the encoder's mechanical coupling
EEF1	[Control Eeprom]	• Internal memory fault, control card	• Check the environment (electromagnetic compatibility) • Turn off, reset, return to factory settings • Inspect/repair the drive
EEF2	[Power Eeprom]	• Internal memory fault, power card	
EnF	[Encoder]	• Encoder feedback fault	• Check [Number of pulses] (PGI) and [Encoder type] (EnS) page 72. • Check that the encoder's mechanical and electrical operation,verify its power supply and connections are all correct • If necessary, reverse the direction of rotation of the motor ([Output Ph rotation] (PHr) parameter, page 65) or the encoder signals
FCF1	[Out. contact. stuck]	• The output contactor remains closed although the opening conditions have been met	• Check the contactor and its wiring • Check the feedback circuit

Buy: www.ValinOnline.com | Phone 844-385-3099 | Email: CustomerService@valin.com

Faults which cannot be reset automatically (continued)

Fault	Name	Probable cause	Remedy
HdF	[IGBT desaturation]	• Short-circuit or grounding at the drive output	• Check the cables connecting the drive to the motor, and the motor insulation. • Perform the diagnostic tests via the [1.10 DIAGNOSTICS] menu.
ILF	[internal com. link]	• Communication fault between option card and drive	• Check the environment (electromagnetic compatibility) • Check the connections • Check that no more than 2 option cards (max. permitted) have been installed on the drive • Replace the option card • Inspect/repair the drive
InF1	[Rating error]	• The power card is different from the card stored	• Check the reference of the power card
InF2	[Incompatible PB]	• The power card is incompatible with the control card	• Check the reference of the power card and its compatibility.
InF3	[Internal serial link]	• Communication fault between the internal cards	• Check the internal connections • Inspect/repair the drive
InF4	[Internal-mftg zone]	• Internal data inconsistent	• Recalibrate the drive (performed by Motortronics Product Support).
InF6	[Internal - fault option]	• The option installed in the drive is not recognized	• Check the reference and compatibility of the option.
InF7	[Internal-hard init.]	• Initialization of the drive is incomplete	• Turn off and reset.
InF8	[Internal-ctrl supply]	• The control power supply is incorrect	• Check the control section power supply
InF9	[Internal- I measure]	• The current measurements are incorrect	• Replace the current sensors or the power card. • Inspect/repair the drive
InFA	[Internal-mains circuit]	• The input stage is not operating correctly	• Perform the diagnostic tests via the [1.10 DIAGNOSTICS] menu. • Inspect/repair the drive
InFb	[Internal- th. sensor]	• The drive temperature sensor is not operating correctly • The braking unit's temperature sensor is not operating correctly.	• Replace the drive temperature sensor • Inspect/repair the drive • Replace the braking unit's temperature sensor • Inspect/repair the braking unit • The monitoring of this fault must be disabled by the [Brake res. fault Mgt.] (bUb) parameter, page 228 if there is no braking unit connected to the drive.
InFC	[Internal-time meas.]	• Fault on the electronic time measurement component	• Inspect/repair the drive
InFE	[internal- CPU]	• Internal microprocessor fault	• Turn off and reset. Inspect/repair the drive.
OCF	[Overcurrent]	• Parameters in the [SETTINGS] (SEt-) and [1.4 MOTOR CONTROL] (drC-) menus are not correct. • Inertia or load too high • Mechanical locking	• Check the parameters. • Check the size of the motor/drive/load. • Check the state of the mechanism.
PrF	[Power removal]	• Fault with the drive's "Power removal" safety function	• Inspect/repair the drive
SCF1	[Motor short circuit]	• Short-circuit or grounding at the drive output	• Check the cables connecting the drive to the motor, and the motor insulation. • Perform the diagnostic tests via the [1.10 DIAGNOSTICS] menu. • Reduce the switching frequency. • Connect chokes in series with the motor.
SCF2	[Impedant sh. circuit]		
SCF3	[Ground short circuit]	• Significant ground leakage current at the drive output if several motors are connected in parallel	
SOF	[Overspeed]	• Instability or driving load too high	• Check the motor, gain and stability parameters. • Add a braking resistor. • Check the size of the motor/drive/load. • Check the parameters settings for the [FREQUENCY METER] (FqF-) function, page 225, if it is configured

Buy: www.ValinOnline.com | Phone 844-385-3099 | Email: CustomerService@valin.com

Faults which cannot be reset automatically (continued)

Fault	Name	Probable cause	Remedy
SPF	[Speed fdback loss]	• Encoder feedback signal missing • Signal on "Pulse input" missing, if the input is used for speed measurement	• Check the wiring between the encoder and the drive • Check the encoder • Check the wiring of the input cable and the detector used
tnF	[Auto-tuning]	• Special motor or motor whose power is not suitable for the drive • Motor not connected to the drive	• Check that the motor/drive are compatible • Check that the motor is present during auto-tuning • If an output contactor is being used, close it during auto-tuning

Buy: www.ValinOnline.com | Phone 844-385-3099 | Email: CustomerService@valin.com

Faults that can be reset with the automatic restart function after the cause has been removed

These faults can also be reset by turning on and off or by means of a logic input or control bit ([Fault reset] (rSF) parameter, page 210). APF, CnF, COF, EPF1, EPF2, FCF2, LFF2, LFF3, LFF4, ObF, OHF, OLF, OPF1, OPF2, OSF, OtF1, OtF2, OtFL, PHF, PtF1, PtF2, PtFL, SLF1, SLF2, SLF3, SrF, SSF and tJF faults can be inhibited and cleared remotely by means of a logic input or control bit ([Fault inhibit assign.] (InH)parameter, page 221).

Fault	Name	Probable cause	Remedy
APF	[Application fault]	• Controller Inside card fault	• Contact factory
bLF	[Brake control]	• Brake release current not reached • Brake engage frequency threshold [Brake engage freq] (bEn) only regulated when brake logic control is assigned	• Check the drive/motor connection • Check the motor windings • Check the [Brake release I FW] (Ibr) and [Brake release I Rev] (Ird) settings, page 154 • Apply the recommended settings for [Brake engage freq] (bEn).
CnF	[Com. network]	• Communication fault on communication card	• Check the environment (electromagnetic compatibility) • Check the wiring. • Check the time-out • Replace the option card • Inspect/repair the drive
COF	[CANopen com.]	• Interruption in communication on the CANopen bus	• Check the communication bus. • Check the time-out • Refer to the CANopen User's Manual
EPF1	[External flt-LI/Bit]	• Fault triggered by an external device, depending on user	• Check the device which caused the fault, and reset
EPF2	[External fault com.]	• Fault triggered by a communication network	• Check for the cause of the fault and reset
FCF2	[Out. contact. open.]	• The output contactor remains open although the closing conditions have been met	• Check the contactor and its wiring • Check the feedback circuit
LCF	[input contactor]	• The drive is not turned on even though [Mains V. time out] (LCt) has elapsed.	• Check the contactor and its wiring • Check the time-out • Check the line/contactor/drive connection
LFF2 LFF3 LFF4	[AI2 4-20mA loss] [AI3 4-20mA loss] [AI4 4-20mA loss]	• Loss of the 4-20 mA reference on analog input AI2, AI3 or AI4	• Check the connection on the analog inputs.
ObF	[Overbraking]	• Braking too sudden or driving load	• Increase the deceleration time • Install a braking resistor if necessary • Activate the [Dec ramp adapt.] (brA) function, page 133, if it is compatible with the application
OHF	[Drive overheat]	• Drive temperature too high	• Check the motor load, the drive ventilation and the ambient temperature. Wait for the drive to cool down before restarting.
OLF	[Motor overload]	• Triggered by excessive motor current	• Check the setting of the motor thermal protection, check the motor load. Wait for the drive to cool down before restarting.
OPF1	[1 output phase loss]	• Loss of one phase at drive output	• Check the connections from the drive to the motor

Buy: www.ValinOnline.com | Phone 844-385-3099 | Email: CustomerService@valin.com

Faults that can be reset with the automatic restart function, after the cause has been removed (continued)

Fault	Name	Probable cause	Remedy
OPF2	[3 motor phase loss]	• Motor not connected or motor power too low • Output contactor open • Instantaneous instability in the motor current	• Check the connections from the drive to the motor • If an output contactor is being used, parameterize [Output Phase Loss] (OPL) = [Output cut] (OAC), page 214. • Test on a low power motor or without a motor:In factory settings mode, motor phase loss detection is active [Output Phase Loss] (OPL) = [Yes] (YES). To check the drive in a test or maintenance environment, without having to use a motor with the same rating as the drive (in particular for high power drives), deactivate motor phase loss detection [Output Phase Loss] (OPL) = [No] (nO) • Check and optimize the following parameters: [IR compensation] (UFr), page 69, [Rated motor volt.] (UnS) and [Rated mot. current] (nCr) page 64 and perform [Auto-tuning] (tUn) page 65.
OSF	[Mains overvoltage]	• Line voltage too high • Disturbance on power supply	• Check the line voltage
OtF1	[PTC1 overheat]	• Overheating of the PTC1 probes detected	• Check the motor load and motor size. • Check the motor ventilation. • Wait for the motor to cool before restarting • Check the type and state of the PTC probes
OtF2	[PTC2 overheat]	• Overheating of the PTC2 probes detected	
OtFL	[LI6=PTC overheat]	• Overheating of PTC probes detected on input LI6	
PtF1	[PTC1 probe]	• PTC1 probes open or short-circuited	• Check the PTC probes and the wiring between them and the motor/drive
PtF2	[PTC2 probe]	• PTC2 probes open or short-circuited	
PtFL	[LI6=PTC probe]	• PTC probes on input LI6 open or short-circuited	
SCF4	[IGBT short circuit]	• Power component fault	• Perform a test via the [1.10 DIAGNOSTICS] menu. • Inspect/repair the drive
SCF5	[Motor short circuit]	• Short-circuit at drive output	• Check the cables connecting the drive to the motor, and the motor's insulation • Perform tests via the [1.10 DIAGNOSTICS] menu. • Inspect/repair the drive
SLF1	[Modbus com.]	• Interruption in communication on the Modbus bus	• Check the communication bus. • Check the time-out • Refer to the Modbus User's Manual
SLF2	[PowerSuite com.]	• Fault communicating with programming software	• Check the Comunications connecting cable. • Check the time-out
SLF3	[HMI com.]	• Fault communicating with the graphic display keypad	• Check the terminal connection • Check the time-out
SrF	[TORQUE TIME OUT FLT]	• The time-out of the torque control function is attained	• Check the function's settings • Check the state of the mechanism
SSF	[Torque/current lim]	• Switch to torque limitation	• Check if there are any mechanical problems • Check the parameters of [TORQUE LIMITATION] (tLA-) page 179 and the parameters of the [TORQUE OR I LIM. DETECT.] (tId-) fault, page 223).
tJF	[IGBT overheat]	• Drive overheated	• Check the size of the load/motor/drive. • Reduce the switching frequency. • Wait for the motor to cool before restarting

Buy: www.ValinOnline.com | Phone 844-385-3099 | Email: CustomerService@valin.com

Faults that can be reset as soon as the cause has been removed

The USF fault can be inhibited and cleared remotely by means of a logic input or control bit ([Fault inhibit assign.] (InH) parameter, page 221).

Fault	Name	Probable cause	Remedy
CFF	[Incorrect config.]	• Option card changed or removed • Control card replaced by a control card configured on a drive with a different rating • The current configuration is inconsistent	• Check that there are no card errors. • In the event of the option card being changed/removed intentionally, see the remarks below • Check that there are no card errors. • In the event of the control card being changed intentionally, see the remarks below • Return to factory settings or retrieve the backup configuration, if it is valid (see page 240)
CFI	[Invalid config.]	• Invalid configuration The configuration loaded in the drive via the bus or communication network is inconsistent.	• Check the configuration loaded previously. • Load a compatible configuration
dLF	[Dynamic load fault]	• Abnormal load variation	• Check that the load is not blocked by an obstacle • Removal of a run command causes a reset
HCF	[Cards pairing]	• The [CARDS PAIRING] (PPI-) function, page 229, has been configured and a drive card has been changed	• In the event of a card error, reinsert the original card • Confirm the configuration by entering the [Pairing password] (PPI) if the card was changed intentionally
PHF	[Input phase loss]	• Drive incorrectly supplied or a fuse blown • Failure of one phase • 3-phase MT Series used on a single-phase line supply • Unbalanced load This protection only operates with the drive on load	• Check the power connection and the fuses. • Use a 3-phase line supply. • Disable the fault by[Input phase loss] (IPL) = [No] (nO). (page 215)
USF	[Undervoltage]	• Line supply too low • Transient voltage dip	• Check the voltage and the parameters of [UNDERVOLTAGE MGT] (USb-), page 218

Option card changed or removed

When an option card is removed or replaced by another, the drive locks in [Incorrect config.] (CFF) fault mode on power-up. If the card has been deliberately changed or removed, the fault can be cleared by pressing the ENT key twice, which **causes the factory settings to be restored** (see page 240) for the parameter groups affected by the card. These are as follows:

Card replaced by a card of the same type

- I/O cards: [Drive menu] (drM)
- Encoder cards: [Drive menu] (drM)
- Communication cards: only the parameters that are specific to communication cards

Card removed (or replaced by a different type of card)

- I/O card: [Drive menu] (drM)
- Encoder card: [Drive menu] (drM)
- Communication card: [Drive menu] (drM) and parameters specific to communication cards

Control card changed

When a control card is replaced by a control card configured on a drive with a different rating, the drive locks in [Incorrect config.] (CFF) fault mode on power-up. If the card has been intentionally changed, the fault can be cleared by pressing the ENT key twice, which **causes all the factory settings to be restored.**

Buy: www.ValinOnline.com | Phone 844-385-3099 | Email: CustomerService@valin.com

Menu [1.1 SIMPLY START] (SIM-)

Code	Name	Factory setting	Customer setting
tCC	[2/3 wire control]	[2 wire] (2C)	
CFG	[Macro configuration]	[Start/Stop] (StS)	
bFr	[Standard mot. freq]	[60 Hz] (60)	
nPr	[Rated motor power]	According to drive rating	
UnS	[Rated motor volt.]	According to drive rating	
nCr	[Rated mot. current]	According to drive rating	
FrS	[Rated motor freq.]	60 Hz	
nSP	[Rated motor speed]	According to drive rating	
tFr	[Max frequency]	60 Hz	
PHr	[Output Ph rotation]	ABC	
ItH	[Mot. therm. current]	According to drive rating	
ACC	[Acceleration]	3.0 s	
dEC	[Deceleration]	3.0 s	
LSP	[Low speed]	0	
HSP	[High speed]	60 Hz	

Functions assigned to I/O

Inputs Outputs	Functions assigned
LI1	
LI2	
LI3	
LI4	
LI5	
LI6	
LI7	
LI8	
LI9	
LI10	
LI11	
LI12	
LI13	
LI14	

Inputs Outputs	Functions assigned
LO1	
LO2	
LO3	
LO4	
AI1	
AI2	
AI3	
AI4	
R1	
R2	
R3	
R4	
RP	
Encoder	

Buy: www.ValinOnline.com | Phone 844-385-3099 | Email: CustomerService@valin.com

Other parameters (table to be created by the user)

Code	Name	Customer setting

Code	Name	Customer setting

Buy: www.ValinOnline.com | Phone 844-385-3099 | Email: CustomerService@valin.com

[2 wire] (2C)	37
[2nd CURRENT LIMIT.]	181
[3 wire] (3C)	37
+/- speed	142
+/- speed around a reference	144
[AUTO DC INJECTION]	136
[AUTOMATIC RESTART]	211
[Auto tuning]	39
[AUTO TUNING BY LI]	196
Brake logic control	150
[CATCH ON THE FLY]	212
Command and reference channels	111
Deferred stop on thermal alarm	216
Direct power supply via DC bus	206
[DRIVE OVERHEAT]	215
[ENA SYSTEM]	74
[ENCODER CONFIGURATION]	95
[EVACUATION]	204
[1.12 FACTORY SETTINGS] (FCS-)	238
[FAULT RESET]	210
[FLUXING BY LI]	147
Half floor	205
High-speed hoisting	161
[JOG]	138
Limit switch management	148
Line contactor command	182
Load measurement	159
[Load sharing]	79
Load variation detection	226
Motor or configuration switching [MULTIMOTORS/CONFIG.]	194
Motor thermal protection	213
[Noise reduction]	77
Output contactor command	184
Parameter set switching [PARAM. SET SWITCHING]	191
[4. PASSWORD] (COd-)	244
PID regulator	166
Positioning by sensors or limit switches	186
Preset speeds	139
PTC probes	208
[RAMP]	131
[REFERENCE SWITCH.]	129
Rope slack	164
[RP CONFIGURATION]	93
Save reference	146
[STOP CONFIGURATION]	134
Stop at distance calculated after deceleration limit switch	188
Summing input/Subtracting input/Multiplier	128
Synchronous motor	71
Torque limitation	178
Torque regulation	175
Traverse control	197
Use of the "Pulse input" input to measure the speed of rotation of the motor.	224

Buy: www.ValinOnline.com | Phone 844-385-3099 | Email: CustomerService@valin.com

Code	Page										
	[1.1 SIMPLY START] (SIM-)	[1.2 MONITORING] (SUP-)	[1.3 SETTINGS] (SET-)	[1.4 MOTOR CONTROL] (drC-)	[1.5 INPUTS / OUTPUTS CFG] (I-O-)	[1.6 COMMAND] (CtL-)	[1.7 APPLICATION FUNCT.] (FUn-)	[1.8 FAULT MANAGEMENT] (FLt-)	[1.9 COMMUNICATION] (COM-)	[1.12 FACTORY SETTINGS] (FCS-)	[4 PASSWORD] (COd-)
AIC-					109						
A2C-					109						
A3C-					109						
AC2			50				133 145 172				
ACC	40		50				131				
AdC							136				
AdCO									233		
Add									233		
AI1A		47			88						
AI1E					88						
AI1F					88						
AI1S					88						
AI1t					88						
AI2A		47			89						
AI2E					89						
AI2F					89						
AI2L					89						
AI2S					89						
AI2t					89						
AI3A		47			90						
AI3E					90						
AI3F					90						
AI3L					90						
AI3S					90						
AI3t					90						
AI4A		47			91						
AI4E					91						
AI4F					91						
AI4L					91						
AI4S					91						
AI4t					91						
AIC1					92		170				
ALGr		46, 48									
ANOA									233		
ANOC									233		

Buy: www.ValinOnline.com | Phone 844-385-3099 | Email: CustomerService@valin.com

Code	Page										
	[1.1 SIMPLY START] (SIM-)	[1.2 MONITORING] (SUP-)	[1.3 SETTINGS] (SEt-)	[1.4 MOTOR CONTROL] (drC-)	[1.5 INPUTS / OUTPUTS CFG] (I-O-)	[1.6 COMMAND] (CtL-)	[1.7 APPLICATION FUNCT.] (FUn-)	[1.8 FAULT MANAGEMENT] (FLt-)	[1.9 COMMUNICATION] (COM-)	[1.12 FACTORY SETTINGS] (FCS-)	[4 PASSWORD] (COd-)
AOI					105						
AOIF					106						
AOIt					105						
AO2					107						
AO2F					107						
AO2t					107						
AO3					108						
AO3F					108						
AO3t					108						
AOHI					105						
AOH2					107						
AOH3					108						
AOLI					105						
AOL2					107						
AOL3					108						
APH		46, 48									
ASHI					106						
ASH2					107						
ASH3					108						
ASLI					106						
ASL2					107						
ASL3					108						
Atr								211			
AUI-					92						
AUS		46, 48									
AUt				65							
bbA				79							
bCI							154				
bdCO									233		
bECd							155				
bEd							156				
bEn			60				155				
bEt			61				155				
bFr	38		64								
bIP							154				
bIr			60				155				

Buy: www.ValinOnline.com | Phone 844-385-3099 | Email: CustomerService@valin.com

Code	Page										
	[1.1 SIMPLY START] (SIM-)	[1.2 MONITORING] (SUP-)	[1.3 SETTINGS] (SET-)	[1.4 MOTOR CONTROL] (drC-)	[1.5 INPUTS / OUTPUTS CFG] (I-O-)	[1.6 COMMAND] (CtL-)	[1.7 APPLICATION FUNCT.] (FUn-)	[1.8 FAULT MANAGEMENT] (FLt-)	[1.9 COMMUNICATION] (COM-)	[1.12 FACTORY SETTINGS] (FCS-)	[4 PASSWORD] (COd-)
bLC							154				
brA							133				
brH0							157				
brH1							157				
brH2							158				
brH3							158				
brH4							158				
brO								228			
brP								228			
brr							158				
brt			60				155				
brU								228			
bSP					86						
bSt							154				
bUb								228			
CCFG	37										
CCS						120					
Cd1						120					
Cd2						120					
CFG	37										
CFPS		46, 48									
CHA1							192				
CHA2							192				
CHCF						119					
CHM							196				
CL2			56				181				
CL1			56	76			181				
CLL								222			
CLO							165				
CLS							190				
CnF1							196				
CnF2							196				
CnFS		46, 48									
COd											245
COd2											245
COF							165				

Buy: www.ValinOnline.com | Phone 844-385-3099 | Email: CustomerService@valin.com

Code	Page										
	[1.1 SIMPLY START] (SIM-)	[1.2 MONITORING] (SUP-)	[1.3 SETTINGS] (SEt-)	[1.4 MOTOR CONTROL] (drC-)	[1.5 INPUTS / OUTPUTS CFG] (I-O-)	[1.6 COMMAND] (CtL-)	[1.7 APPLICATION FUNCT.] (FUn-)	[1.8 FAULT MANAGEMENT] (FLt-)	[1.9 COMMUNICATION] (COM-)	[1.12 FACTORY SETTINGS] (FCS-)	[4 PASSWORD] (COd-)
COL								222			
COP						121					
COr							165				
CP1							160				
CP2							160				
CrH2					89						
CrH3					90						
CrH4					91						
CrL2					89						
CrL3					90						
CrL4					91						
CSt											245
Ctd			61								
Ctt				66							
dA2							130				
dA3							130				
dAF							189				
dAL							189				
dAr							189				
dAS							185				
dbn							177				
dbP							177				
dbS							185				
dCF			54				134	230			
dCI							135				
dCO							206				
dE2			50				133, 145				
dEC	40		50				131				
dLb								227			
dLd								227			
dLr											245
dOI					102						
dOId					102						
dOIH					102						
dOIS					102						

Buy: www.ValinOnline.com | Phone 844-385-3099 | Email: CustomerService@valin.com

Code	Page										
	[1.1 SIMPLY START] (SIM-)	[1.2 MONITORING] (SUP-)	[1.3 SETTINGS] (SEt-)	[1.4 MOTOR CONTROL] (drC-)	[1.5 INPUTS / OUTPUTS CFG] (I-O-)	[1.6 COMMAND] (CtL-)	[1.7 APPLICATION FUNCT.] (FUn-)	[1.8 FAULT MANAGEMENT] (FLt-)	[1.9 COMMUNICATION] (COM-)	[1.12 FACTORY SETTINGS] (FCS-)	[4 PASSWORD] (COd-)
dSF							190				
dS1							145				
dSP							143				
dtF							203				
EbO							202				
ECC								223			
ECt								223			
EF1					96						
EFr					96						
EIL					96						
EnA				75							
EnC				73	95						
EnS				72	95						
EnU				73	96						
EPL								217			
ErCO									233		
EtF								217			
F1				67							
F2				67							
F2d			62								
F3				67							
F4				67							
F5				67							
FCP				68							
FCS1										240	
Fdt								225			
FFt			62				134				
FL1							147				
FLO									234		
FLOC									234		
FLOt									234		
FLr								212			
FLU			57				147				
FP1							172				
F9A								225			
F9C								225			

Buy: www.ValinOnline.com | Phone 844-385-3099 | Email: CustomerService@valin.com

Code	Page										
	[1.1 SIMPLY START] (SIM-)	[1.2 MONITORING] (SUP-)	[1.3 SETTINGS] (SEt-)	[1.4 MOTOR CONTROL] (drC-)	[1.5 INPUTS / OUTPUTS CFG] (I-O-)	[1.6 COMMAND] (CtL-)	[1.7 APPLICATION FUNCT.] (FUn-)	[1.8 FAULT MANAGEMENT] (FLt-)	[1.9 COMMUNICATION] (COM-)	[1.12 FACTORY SETTINGS] (FCS-)	[4 PASSWORD] (COd-)
F9F								225			
F9L			62								
F9S		46, 48									
F9t								225			
Fr1						119					
Fr1b							129				
Fr2						120					
FrH		46, 48									
FrS	38		64								
FrSS				71							
Frt							133				
Fry-										240	
FSt							134				
Ftd			62								
GFS										240	
GIE			54	75							
GPE			54	75							
HFF-							205				
HLS							205				
HSO							165				
HSP	40		51								
Ibr			60				154				
IbrA							160				
IdA				70							
IdC			54				135	230			
IdC2			54				135	230			
IdM				70							
InH								221			
Inr			50				131				
InSP				64							
IntP							179				
IPL	38							215			
Ird			60				154				
ItH	40		51								
JdC			61				156				
JGF			57				138				

Buy: www.ValinOnline.com | Phone 844-385-3099 | Email: CustomerService@valin.com

Code	Page										
	[1.1 SIMPLY START] (SIM-)	[1.2 MONITORING] (SUP-)	[1.3 SETTINGS] (SET-)	[1.4 MOTOR CONTROL] (drC-)	[1.5 INPUTS / OUTPUTS CFG] (I-O-)	[1.6 COMMAND] (CtL-)	[1.7 APPLICATION FUNCT.] (FUn-)	[1.8 FAULT MANAGEMENT] (FLt-)	[1.9 COMMUNICATION] (COM-)	[1.12 FACTORY SETTINGS] (FCS-)	[4 PASSWORD] (COd-)
JGt			57				138				
JOG							138				
LIA to LI4A		47			84						
LId to LI4d					84						
LAF							149				
LAr							149				
LAS							149				
LbA				79							
LbC			62	79							
LbC1				81							
LbC2				81							
LbC3				81							
LbF				81							
LC2							181				
LCr		46, 48									
LCt							183				
LdS				69							
LES							183				
LEt								217			
LFA				70							
LFF								230			
LFL2 LFL3 LFL4								220			
LFM				70							
LIS1		47									
LIS2		47									
LLC							183				
LO1					100						
LO1d					100						
LO1H					100						
LO1S					100						
LO2					100						
LO2d					100						
LO2H					100						
LO2S					100						
LO3					101						

Buy: www.ValinOnline.com | Phone 844-385-3099 | Email: CustomerService@valin.com

Code	Page										
	[1.1 SIMPLY START] (SIM-)	[1.2 MONITORING] (SUP-)	[1.3 SETTINGS] (SEt-)	[1.4 MOTOR CONTROL] (drC-)	[1.5 INPUTS / OUTPUTS CFG] (I-O-)	[1.6 COMMAND] (CtL-)	[1.7 APPLICATION FUNCT.] (FUn-)	[1.8 FAULT MANAGEMENT] (FLt-)	[1.9 COMMUNICATION] (COM-)	[1.12 FACTORY SETTINGS] (FCS-)	[4 PASSWORD] (COd-)
LO3d					101						
LO3H					101						
LO3S					101						
LO4					101						
LO4d					101						
LO4H					101						
LO4S					101						
LP1							160				
LP2							160				
LrS				69							
LSP	40		51								
MA2							130				
MA3							130				
MFr		46, 48	59								
MMF		46, 48									
nCA1									232		
nCA2									232		
nCA3									232		
nCA4									232		
nCA5									232		
nCA6									232		
nCA7									232		
nCA8									232		
nCr	38		64								
nCrS				69							
nLS							190				
nMA1									232		
nMA2									232		
nMA3									232		
nMA4									232		
nMA5									232		
nMA6									232		
nMA7									232		
nMA8									232		
nPr	38		64								
nrd				77							

Buy: www.ValinOnline.com | Phone 844-385-3099 | Email: CustomerService@valin.com

Code	Page										
	[1.1 SIMPLY START] (SIM-)	[1.2 MONITORING] (SUP-)	[1.3 SETTINGS] (SET-)	[1.4 MOTOR CONTROL] (drC-)	[1.5 INPUTS / OUTPUTS CFG] (I-O-)	[1.6 COMMAND] (CtL-)	[1.7 APPLICATION FUNCT.] (FUn-)	[1.8 FAULT MANAGEMENT] (FLt-)	[1.9 COMMUNICATION] (COM-)	[1.12 FACTORY SETTINGS] (FCS-)	[4 PASSWORD] (COd-)
nSL				70							
nSP	38		64								
nSPS				69							
nSt							134				
oO2		46, 51									
oO3		46, 51									
oO4		46, 51									
oO5		46, 51									
oO6		46, 51									
OCC							185				
Odt								214			
OFI				76							
OHL								215			
OLL								214			
OPL								214			
OPr		46, 48									
OSP							165				
PAH			59				171				
PAL			59				171				
PAS							190				
PAU							172				
PEr			60				171				
PES							160				
PFI					93						
PFr					93						
PGA					96						
PGI				72	96						
PHS				69							
PHr	39			65							
PIA					93						
PIC							171				
PIF							170				
PIF1							170				
PIF2							170				
PII							170				
PIL					93						

Buy: www.ValinOnline.com | Phone 844-385-3099 | Email: CustomerService@valin.com

Code	Page										
	[1.1 SIMPLY START] (SIM-)	[1.2 MONITORING] (SUP-)	[1.3 SETTINGS] (SEt-)	[1.4 MOTOR CONTROL] (drC-)	[1.5 INPUTS / OUTPUTS CFG] (I-O-)	[1.6 COMMAND] (CtL-)	[1.7 APPLICATION FUNCT.] (FUn-)	[1.8 FAULT MANAGEMENT] (FLt-)	[1.9 COMMUNICATION] (COM-)	[1.12 FACTORY SETTINGS] (FCS-)	[4 PASSWORD] (COd-)
PIM							172				
PIP1							170				
PIP2							170				
PIS							171				
POH			59				171				
POL			59				171				
PP1								229			
PPn				70							
PPnS				69							
Pr2							174				
Pr4							174				
PrP			59				171				
PS1-							192				
PS2-							193				
PS3-							193				
PS2							140				
PS4							140				
PS8							140				
PS16							140				
PSr			60				172				
PSt						119					
PtC1								209			
PtC2								209			
PtCL								209			
PtH		46, 48									
qSH			61				202				
qSL			61				202				
r1					97						
r1d					98						
r1H					98						
r1S					98						
r2					98						
r2d					98						
r2H					98						
r2S					98						
r3					99						

Buy: www.ValinOnline.com | Phone 844-385-3099 | Email: CustomerService@valin.com

Code	Page										
	[1.1 SIMPLY START] (SIM-)	[1.2 MONITORING] (SUP-)	[1.3 SETTINGS] (SET-)	[1.4 MOTOR CONTROL] (drC-)	[1.5 INPUTS / OUTPUTS CFG] (I-O-)	[1.6 COMMAND] (CtL-)	[1.7 APPLICATION FUNCT.] (FUn-)	[1.8 FAULT MANAGEMENT] (FLt-)	[1.9 COMMUNICATION] (COM-)	[1.12 FACTORY SETTINGS] (FCS-)	[4 PASSWORD] (COd-)
r3d					99						
r3H					99						
r3S					99						
r4					99						
r4d					99						
r4H					99						
r4S					99						
rAP				75							
rCA							185				
rCb							129				
rdG			59				171				
rFC						120					
rFr		46, 48									
rFt-							204				
rIG			59				171				
rIn						119					
rP								210			
rP2			60				174				
rP3			60				174				
rP4			60				174				
rPA								210			
rPC		46, 48									
rPE		46, 48									
rPF		46, 48									
rPG			59				170				
rPI							170				
rPO		46, 48									
rPS							133				
rPt							131				
rrS					83						
rSA				70							
rSAS				69							
rSd							165				
rSF								210			
rSL							173				
rSM				70							

Buy: www.ValinOnline.com | Phone 844-385-3099 | Email: CustomerService@valin.com

Code	Page										
	[1.1 SIMPLY START] (SIM-)	[1.2 MONITORING] (SUP-)	[1.3 SETTINGS] (SEt-)	[1.4 MOTOR CONTROL] (drC-)	[1.5 INPUTS / OUTPUTS CFG] (I-O-)	[1.6 COMMAND] (CtL-)	[1.7 APPLICATION FUNCT.] (FUn-)	[1.8 FAULT MANAGEMENT] (FLt-)	[1.9 COMMUNICATION] (COM-)	[1.12 FACTORY SETTINGS] (FCS-)	[4 PASSWORD] (COd-)
rSMS				71							
rSP							204				
rStL							165				
rSU							204				
rtH		46, 48									
rtO							177				
rtr							203				
SA2							130				
SA3							130				
SAF							189				
SAL							189				
SAr							189				
SAt								216			
SCL							165				
SCS1										240	
SdC1			55				136, 155				
SdC2			55				136				
Sdd								223			
SFC			51								
SFd							190				
SFr			56	76							
SIt			51								
SLL								222			
SLP			54	69							
SnC							203				
SOP				77							
SP2			58				141				
SP3			58				141				
SP4			58				141				
SP5			58				141				
SP6			58				141				
SP7			58				141				
SP8			58				141				
SP9			58				141				
SP10			58				141				

Buy: www.ValinOnline.com | Phone 844-385-3099 | Email: CustomerService@valin.com

Code	Page										
	[1.1 SIMPLY START] (SIM-)	[1.2 MONITORING] (SUP-)	[1.3 SETTINGS] (SEt-)	[1.4 MOTOR CONTROL] (drC-)	[1.5 INPUTS / OUTPUTS CFG] (I-O-)	[1.6 COMMAND] (CtL-)	[1.7 APPLICATION FUNCT.] (FUn-)	[1.8 FAULT MANAGEMENT] (FLt-)	[1.9 COMMUNICATION] (COM-)	[1.12 FACTORY SETTINGS] (FCS-)	[4 PASSWORD] (COd-)
SP11			58				141				
SP12			58				141				
SP13			58				141				
SP14			58				141				
SP15			59				141				
SP16			59				141				
SPd		46, 48									
SPG			51								
SPM							146				
SPt							176				
SrP			59				145				
SSb								223			
Std							190				
StM								218			
StO								223			
StP								218			
Str							143				
Strt								219			
Stt							134				
SUL				77							
tA1			50				132				
tA2			50				132				
tA3			50				132				
tA4			51				132				
tAA							179				
tAC		46, 48									
tAr								211			
tbE			60				155				
tbO							202				
tbr									233		
tbr2									233		
tbS								218			
tCC	37				83						
tCt					83						
td1			54				135	230			
tdC			54				135	230			

Buy: www.ValinOnline.com | Phone 844-385-3099 | Email: CustomerService@valin.com

Code	Page										
	[1.1 SIMPLY START] (SIM-)	[1.2 MONITORING] (SUP-)	[1.3 SETTINGS] (SEt-)	[1.4 MOTOR CONTROL] (drC-)	[1.5 INPUTS / OUTPUTS CFG] (I-O-)	[1.6 COMMAND] (CtL-)	[1.7 APPLICATION FUNCT.] (FUn-)	[1.8 FAULT MANAGEMENT] (FLt-)	[1.9 COMMUNICATION] (COM-)	[1.12 FACTORY SETTINGS] (FCS-)	[4 PASSWORD] (COd-)
tdC1			55				136				
tdC2			55				137				
tdn							202				
tdS								225			
tFO									233		
tFO2									233		
tFr	38		65								
tHA								215, 216			
tHd		46, 48									
tHr		46, 48									
tHt								214			
tLA							179				
tLC							180				
tLd								227			
tLIG			61				179				
tLIM			61				179				
tLS			57				173				
tnL								228			
tOb							177				
tOS							165				
tPb								225			
tr1							176				
trA				70							
trC							202				
trH			61				202				
trL			61				202				
trM				70							
trP							176				
trr		46, 48									
trt							176				
tSd							176				
tSM								218			
tSS							176				
tSt							176				
tSY							203				

Buy: www.ValinOnline.com | Phone 844-385-3099 | Email: CustomerService@valin.com

Code	Page										
	[1.1 SIMPLY START] (SIM-)	[1.2 MONITORING] (SUP-)	[1.3 SETTINGS] (SET-)	[1.4 MOTOR CONTROL] (drC-)	[1.5 INPUTS / OUTPUTS CFG] (I-O-)	[1.6 COMMAND] (CtL-)	[1.7 APPLICATION FUNCT.] (FUn-)	[1.8 FAULT MANAGEMENT] (FLt-)	[1.9 COMMUNICATION] (COM-)	[1.12 FACTORY SETTINGS] (FCS-)	[4 PASSWORD] (COd-)
ttd			62					214, 216			
ttd2								214, 216			
ttd3								214, 216			
ttH			61								
ttL			61								
ttO								233			
ttr			61				156				
tUL							196				
tUn	39			65							
tUP							202				
tUS	39			65							
U0				67							
U1				67							
U2				67							
U3				67							
U4				67							
U5				67							
Ubr				79							
UC2				68							
UCb								212			
UCP				68							
UFr			54	69							
UIH1					88						
UIH2					89						
UIH4					91						
UIL1					88						
UIL2					89						
UIL4					91						
ULn		46, 48									
ULr											245
UnS	38		64								
UOH1					105						
UOH2					107						
UOH3					108						

Buy: www.ValinOnline.com | Phone 844-385-3099 | Email: CustomerService@valin.com

Code	Page										
	[1.1 SIMPLY START] (SIM-)	[1.2 MONITORING] (SUP-)	[1.3 SETTINGS] (SEt-)	[1.4 MOTOR CONTROL] (drC-)	[1.5 INPUTS / OUTPUTS CFG] (I-O-)	[1.6 COMMAND] (CtL-)	[1.7 APPLICATION FUNCT.] (FUn-)	[1.8 FAULT MANAGEMENT] (FLt-)	[1.9 COMMUNICATION] (COM-)	[1.12 FACTORY SETTINGS] (FCS-)	[4 PASSWORD] (COd-)
UOL1					105						
UOL2					107						
UOL3					108						
UOP		46, 48									
UPL								218			
UrES								218			
USb								218			
USI							145				
USL								218			
USP							143				
USt								218			

Buy: www.ValinOnline.com | Phone 844-385-3099 | Email: CustomerService@valin.com